Job Name: 26-1987P6 - Project Nova Job Location: Sullivan, IN 47882 Contractor: McCreary Concrete Products, Inc.	Plant: Beaver Dam 9/3/2026 3:15:43 PM	Tech: J. Coppage PC: M. Sullivan	

Structure ID: 1305

P2 MH108RS96 MH RISER

P5) 24" - CASTING HEIGHT - 0"	0 lb
P4) 24" - GRADE RING - 4"	270 lb
P3) 108" - MH FLAT TOP w/24" ECC Hole - 17"	10472 lb
P2) 108" - MH RISER - 96"	29768 lb
P1) 108" - MH BASE - 96"	34643 lb
2) 108" - Conseal CS-102 1.00"	0 lb
2) 24" - Conseal CS-102 1.00"	0 lb
1) Hole - 76	0 lb
1) Hole - 68	0 lb
1) Hole - 34	0 lb
4) Hole - 6	0 lb
16) MH Step ML-10-TDS-NCR - 10"	0 lb

Structure Total:	75153 lb

Rim: 508.94' Rim to Invert: 17.38' Slack: 1.56" Sump: 6" Step Position: 240

Structure Notes: .
1. (CASTING PROVIDED BY OTHERS)
2. PER ASTM C478 SPECIFICATIONS.
3. CONCRETE = 4,000 PSI AT 28 DAYS.
4. REINFORCING PER ASTM A615 (GRADE 60).
- TOP SLAB (As .62) #5 BARS AT 6" C.C.E.W..
- RISER/WALLS (As .36)
- FLOOR (As .47) #5 BARS AT 8" C.C.E.W.

Position	Elev	Angle	Ext. (cw)	Pipe	Pipe OD	Connector	Hole	Horz Size	Up (_)	Offset
Invert 1										
Invert 2										
Invert 3										
Invert 4	505.94'	0°	0"	4" HDPE	4.8"	Hole 6	6"	6.003"	77.16"	0"
Invert 5	505.94'	90°	100.531"	4" HDPE	4.8"	Hole 6	6"	6.003"	77.16"	0"
Invert 6	505.94'	180°	201.062"	4" HDPE	4.8"	Hole 6	6"	6.003"	77.16"	0"
Invert 7	505.94'	270°	301.593"	4" HDPE	4.8"	Hole 6	6"	6.003"	77.16"	0"
Invert 8										

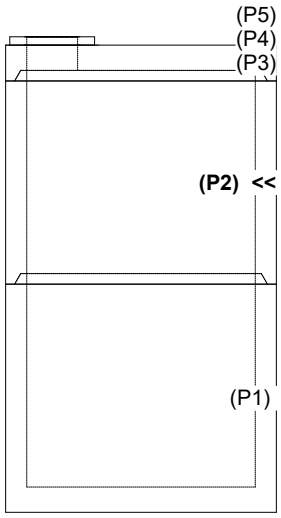

RIGHT-SIDE UP VIEW (int. dimensions)

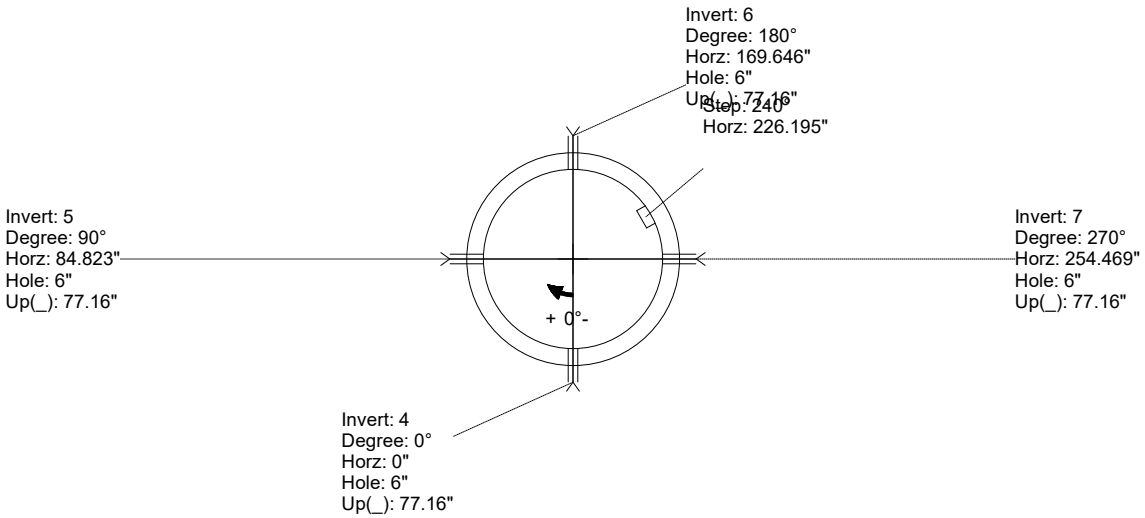

INSIDE WALL DIMENSIONS

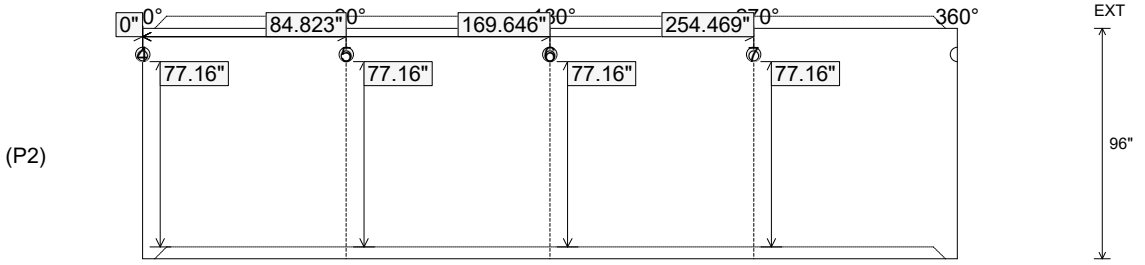

Coating (Int): Coating (Ext):	Seam Up: Tongue Seam Dn: Groove	Wall Thickness: 10" Floor Height: 0"	Height (Int): 96" Height (Ext): 96"	Weight (Net): 29768 lb Volume (Net): 7.6cu.yd