Job Name: 26-1899 - Gateway 65 Industrial Road Job Location: Franklin, KY Contractor: RD Sitework LLC	Plant: 100 6/4/2026 4:39:28 PM	Tech: Jared - F PC: E. Bardley	

Structure ID: QL70-3 POND3

P2 BXLD4848FL-24SQ **BX FLAT LID 8inW w/CC 24"x24" HOLE F/F**

P3) 24" x 24" - CASTING HEIGHT - 4"	0 lb
P2) 48" x 48" - BX FLAT LID 8inW w/CC 24"x24" HOLE F/F - 8"	2363 lb
P1) 48" x 48" - BOX BASE 8inW, 8inF F/n - 36"	8163 lb
1) CASTING - HOE-326-BH F/G	289 lb
1) 48" x 48" - Conseal CS-102 1.00"	0 lb
1) 24" x 24" - Conseal CS-102 1.00"	0 lb
1) Hole - 0	0 lb
Structure Total:	10815 lb

Structure Notes: .
1. PER ASTM C913 SPECIFICATIONS.
2. CONCRETE = 4,000 PSI AT 28 DAYS.
3. NO STEPS AND NO INVERT CHANNEL.
4. CASTING BY ICAST (HOE-326-BH F/G OR EJ 6626).

.
REINFORCING PER ASTM A615 (GRADE 60).
- TOP SLAB (As .62) #5 BARS AT 6" C.C.E.W.
- WALLS (As .12) #5 BARS AT 12" C.C.E.W.
- FLOOR (As .12) #5 BARS AT 12" C.C.E.W.

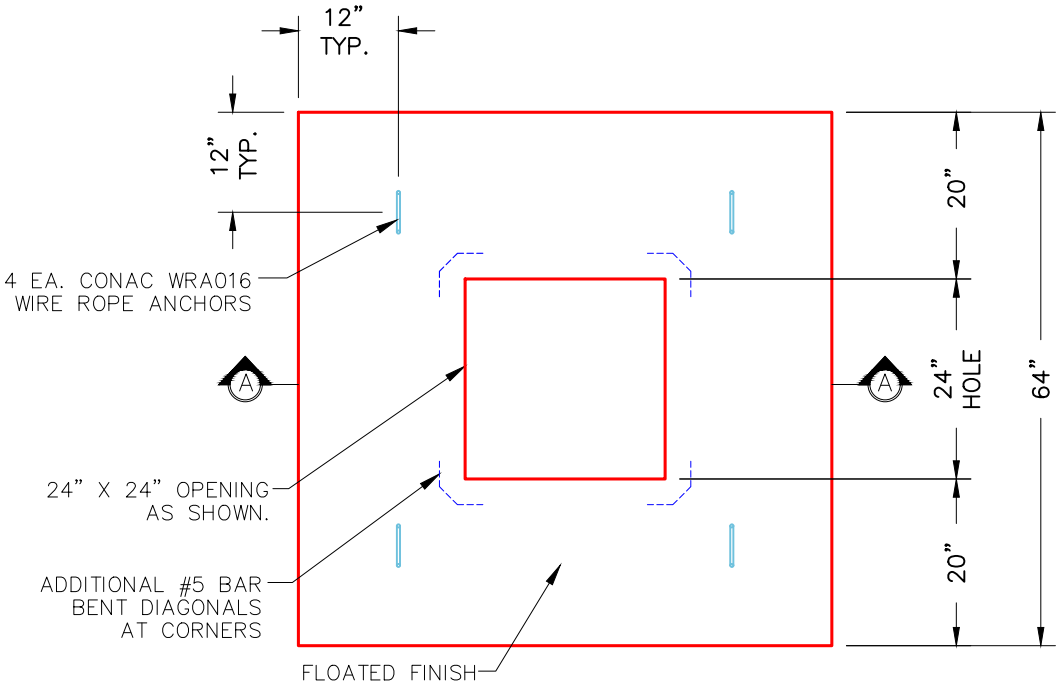

PLAN VIEW

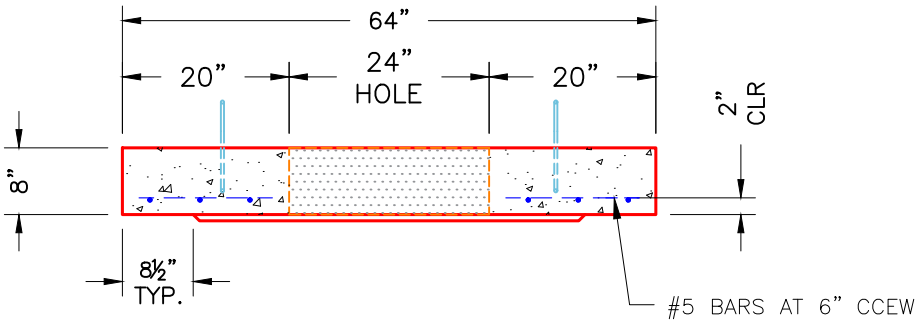

SECTION A-A

NOTES:
1. MANUFACTURED TO ASTM C-913 (LATEST REVISION).
2. CONCRETE: 4,000 PSI AT 28 DAYS.
3. REINFORCING: #5 BAR @ 6" O.C. E.W. (GRADE 60).

Coating (Int): Coating (Ext):	Seam Up: Flat Seam Dn: Flat	Wall Thickness: 8"	Height (Ext): 8"	Weight (Net): 2363 lb Volume (Net): 0.6cu.yd