Job Name: 26-1822 - Project Versailles Job Location: Versailles, KY Contractor: KY Earthworks	Plant: 100 9/24/2026 11:31:09 AM	Tech: Jared - F PC: E. Bradley	

Structure ID: F12 DBI11

P1 BX2430-08BA36 BOX BASE 8inW, 8inF F/n

P2) 24" x 30" - CASTING HEIGHT - 3.75"	0 lb
P1) 24" x 30" - BOX BASE 8inW, 8inF F/n - 36"	4262 lb
1) CASTING - HOE KY-460-11 F/G (DBI 11)	421 lb
1) 24" x 30" - Conseal CS-102 1.00"	0 lb
1) Hole - 26	0 lb
Structure Total:	4683 lb

Structure Notes: .
1. PER ASTM C913 SPECIFICATIONS.
2. CONCRETE = 4,000 PSI AT 28 DAYS.
3. NO STEPS AND NO INVERT CHANNEL.
4. CASTING BY ICAST (HOE KY-460-11 F/G (DBI 11)).

.
REINFORCING PER ASTM A615 (GRADE 60).
- WALLS (As .12) #5 BARS AT 12" C.C.E.W.
- FLOOR (As .12) #5 BARS AT 12" C.C.E.W.

Rim: 934.01' Rim to Invert: 3.28' Slack: 2.11" Sump: 2.5" Step Position:

Position	Elev	Angle	Ext. (cw)	Pipe	Pipe OD	Connector	Hole	Horz Size	Up (_)	Offset
Invert 1	930.73'	90°	23"	18" RCP B WALL	23"	Hole 26	26"	26"	0"	0"
Invert 2										
Invert 3										
Invert 4										
Invert 5										
Invert 6										
Invert 7										
Invert 8										

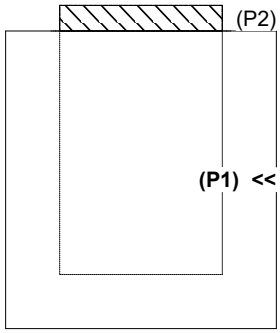

RIGHT-SIDE UP VIEW (int. dimensions)

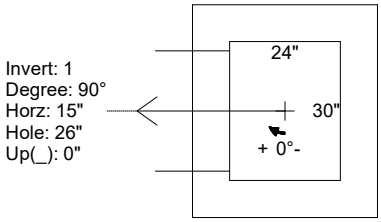

UPSIDE-DOWN VIEW (int. dimenions)

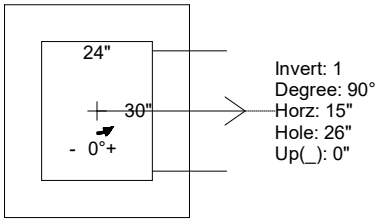

INSIDE WALL DIMENSIONS

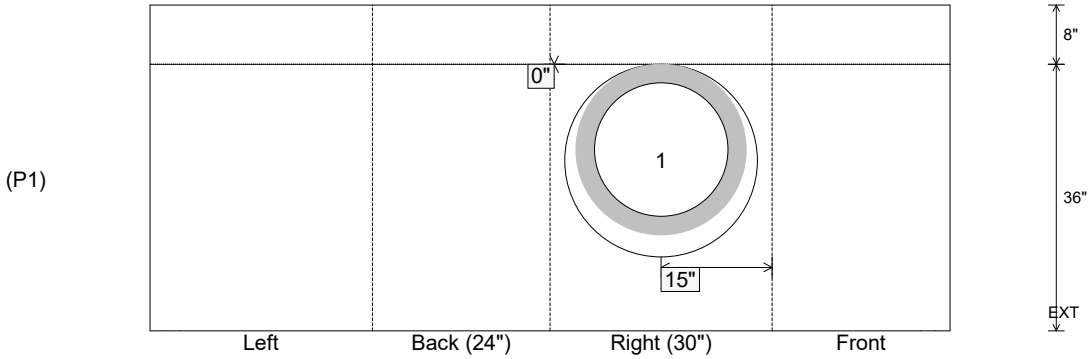

Coating (Int): Coating (Ext):	Seam Up: Flat Seam Dn: n/a	Wall Thickness: 8" Floor Height: 8"	Height (Int): 36" Height (Ext): 44"	Weight (Net): 4262 lb Volume (Net): 1.09cu.yd