Job Name: 26-1822 - Project Versailles Job Location: Versailles, KY Contractor: KY Earthworks	Plant: 100 9/24/2026 11:31:35 AM	Tech: Jared - F PC: E. Bradley	

Structure ID: A8.3.1 ST-CI

P1 BX2436-08BVF **BOX BASE 8inW, 8inF, Variable Ht F/n**

P2) 24" x 36" - CASTING HEIGHT - 6"	0 lb
P1) 24" x 36" - BOX BASE 8inW, 8inF, Variable Ht F/n - 40"	5234 lb
1) CASTING - HOE 525 LV SET (F/G/H)	442 lb
1) 24" x 36" - Conseal CS-102 1.00"	0 lb
1) Hole - 20	0 lb

Structure Total:	5676 lb

Structure Notes: .
1. PER ASTM C913 SPECIFICATIONS.
2. CONCRETE = 4,000 PSI AT 28 DAYS.
3. NO STEPS AND NO INVERT CHANNEL.
4. CASTING BY ICAST (HOE 525 LV SET (F/G/H)).
.
REINFORCING PER ASTM A615 (GRADE 60).
- WALLS (As .12) #5 BARS AT 12" C.C.E.W.
- FLOOR (As .12) #5 BARS AT 12" C.C.E.W.

Rim: 934.6' Rim to Invert: 3.9' Slack: 2.05" Sump: 1.25" Step Position:

Position	Elev	Angle	Ext. (cw)	Pipe	Pipe OD	Connector	Hole	Horz Size	Up (_)	Offset
Invert 1	930.7'	60°	21.375"	15" HDPE	17.6"	Hole 20	20"	23.094"	0"	6"
Invert 2										
Invert 3										
Invert 4										
Invert 5										
Invert 6										
Invert 7										
Invert 8										

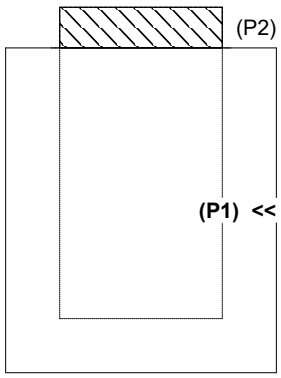

RIGHT-SIDE UP VIEW (int. dimensions)

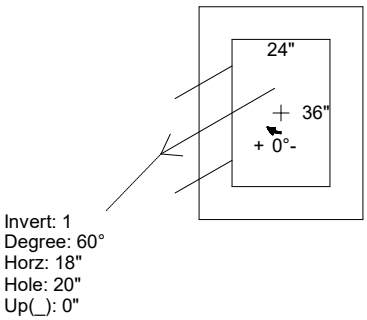

UPSIDE-DOWN VIEW (int. dimenions)

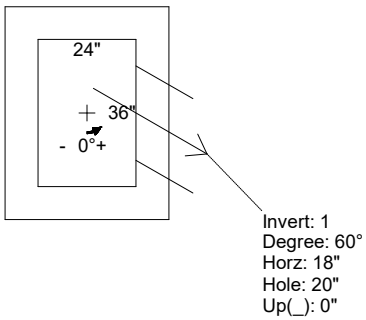

INSIDE WALL DIMENSIONS

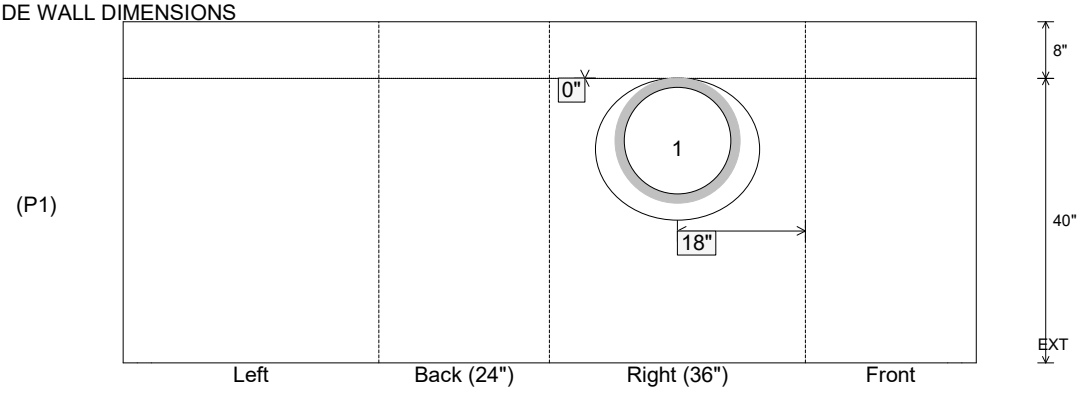

Coating (Int): Coating (Ext):	Seam Up: Flat Seam Dn: n/a	Wall Thickness: 8" Floor Height: 8"	Height (Int): 40" Height (Ext): 48"	Weight (Net): 5234 lb Volume (Net): 1.34cu.yd