Job Name: 26-1822 - Project Versailles Job Location: Versailles, KY Contractor: KY Earthworks	Plant: 100 9/28/2026 2:21:27 PM	Tech: Jared - F PC: E. Bradley	

Structure ID: A6 ST-CI

P1 MH072BAVF **MH BASE Custom Ht F/n**

P3) 24" x 36" - CASTING HEIGHT - 6"	0 lb
P2) 72" - MH FLAT TOP w/24"x36" Hole F/F - 10"	4149 lb
P1) 72" - MH BASE Custom Ht F/n - 49"	7732 lb
1) CASTING - HOE 525 LV SET (F/G/H)	442 lb
1) 72" - Conseal CS-102 1.00"	0 lb
1) 24" x 36" - Conseal CS-102 1.00"	0 lb
1) DOGHOUSE INVRTD - 50"x49"	0 lb
1) Hole - 24	0 lb
1) Hole - 44	0 lb
1) Hole - 38	0 lb
4) MH Step ML-10-TDS-NCR - 10"	0 lb
Structure Total:	12323 lb

Structure Notes: .
1. PER ASTM C478 SPECIFICATIONS.
2. CONCRETE = 4,000 PSI AT 28 DAYS.
3. NO INVERT CHANNEL.
4. CASTING BY ICAST (HOE 525 LV SET (F/G/H))

.
REINFORCING PER ASTM A615 (GRADE 60).
- TOP SLAB (As .62) #5 BARS AT 6" C.C.E.W. (DOUBLE MAT)
- RISER/WALLS (As .18)
- FLOOR (As .37) #5 BARS AT 10" C.C.E.W.

Rim: 932.58' Rim to Invert: 5.17' Slack: 0.19" Sump: 3.15" Step Position: 55°

Position	Elev	Angle	Ext. (cw)	Pipe	Pipe OD	Connector	Hole	Horz Size	Up (_)	Offset
Invert 1	927.41'	0°	0"	42" HDPE	47.7"	DOGHOUSE INVRTD 50"x49"	50" x 49"	55.271"	0"	0"
Invert 2	928.5'	90°	67.5"	18" HDPE	21.2"	Hole 24	24"	24.468"	14.625"	0"
Invert 3	927.41'	180°	135.125"	36" HDPE	41.7"	Hole 44	44"	47.337"	0.25"	0"
Invert 4	927.41'	270°	202.625"	30" HDPE	35.1"	Hole 38	38"	40.031"	0.625"	0"
Invert 5										
Invert 6										
Invert 7										
Invert 8										

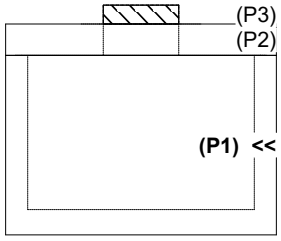

RIGHT-SIDE UP VIEW (int. dimensions)

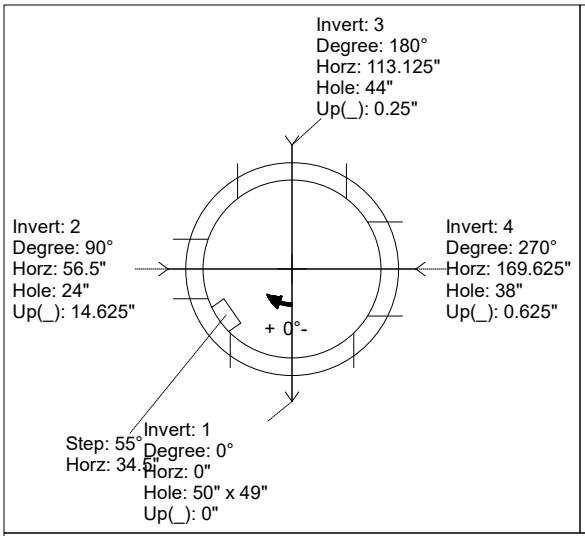

UPSIDE-DOWN VIEW (int. dimenions)

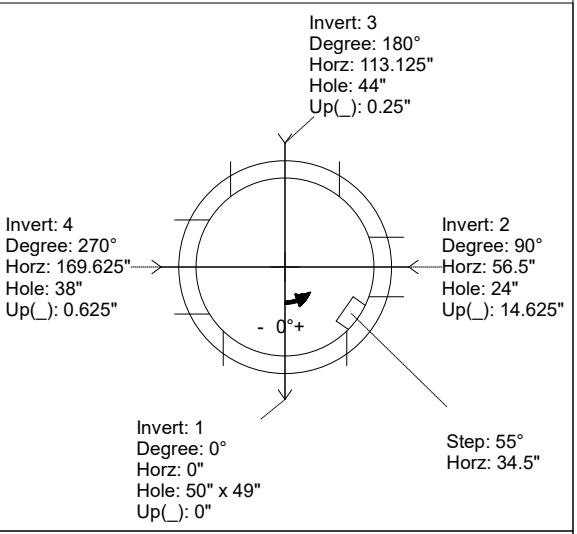

INSIDE WALL DIMENSIONS

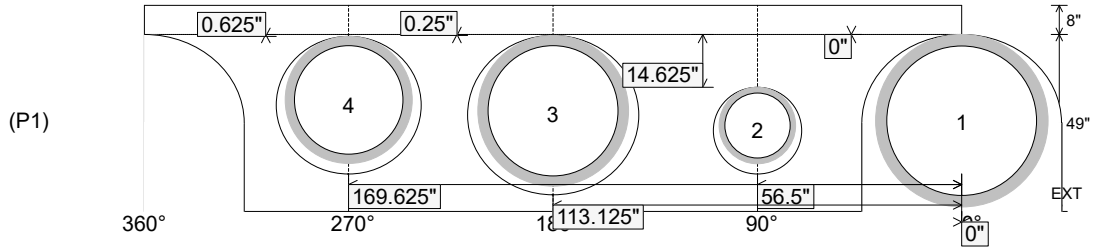

Coating (Int): Coating (Ext):	Seam Up: Flat Seam Dn: n/a	Wall Thickness: 7" Floor Height: 8"	Height (Int): 49" Height (Ext): 57"	Weight (Net): 7732 lb Volume (Net): 1.98cu.yd