Job Name: 26-1822 - Project Versailles Job Location: Versailles, KY Contractor: KY Earthworks	Plant: 100 9/24/2026 11:27:11 AM	Tech: Jared - F PC: E. Bradley	

Structure ID: A4.2 ST-YD

P1 MH048BA42 MH BASE T/n

P4) 24" x 24" - CASTING HEIGHT - 4"	0 lb
P3) 24" x 24" - GRADE RING F/F - 3"	258 lb
P2) 48" - MH FLAT TOP w/24"x24" Hole F/G - 12"	1500 lb
P1) 48" - MH BASE T/n - 42"	4067 lb
1) CASTING - HOE 280T F/G	182 lb
1) 48" - Conseal CS-102 1.00"	0 lb
2) 24" x 24" - Conseal CS-102 1.00"	0 lb
1) Hole - 24	0 lb
3) MH Step ML-10-TDS-NCR - 10"	0 lb
Structure Total:	6007 lb

Structure Notes: .
1. PER ASTM C478 SPECIFICATIONS.
2. CONCRETE = 4,000 PSI AT 28 DAYS.
3. NO INVERT CHANNEL.
4. CASTING BY ICAST (HOE 280T F/G)

.
REINFORCING PER ASTM A615 (GRADE 60).
- TOP SLAB (As .62) #5 BARS AT 6" C.C.E.W..
- RISER/WALLS (As .12)
- FLOOR (As .31) #5 BARS AT 12" C.C.E.W.

Rim: 932.1' Rim to Invert: 5.14' Slack: 2.28" Sump: 1.6" Step Position: 90

Position	Elev	Angle	Ext. (cw)	Pipe	Pipe OD	Connector	Hole	Horz Size	Up (_)	Offset
Invert 1	926.96'	0°	0"	18" HDPE	21.2"	Hole 24	24"	25.133"	0"	0"
Invert 2										
Invert 3										
Invert 4										
Invert 5										
Invert 6										
Invert 7										
Invert 8										

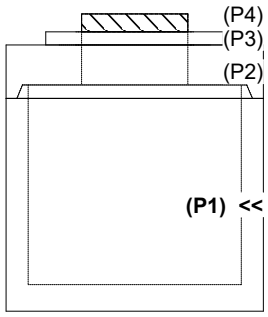

RIGHT-SIDE UP VIEW (int. dimensions)

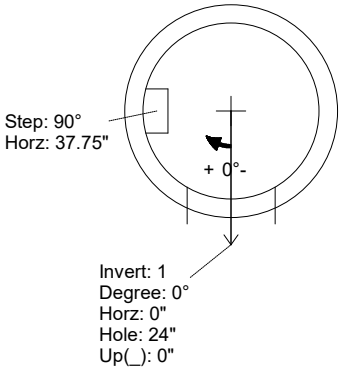

UPSIDE-DOWN VIEW (int. dimenions)

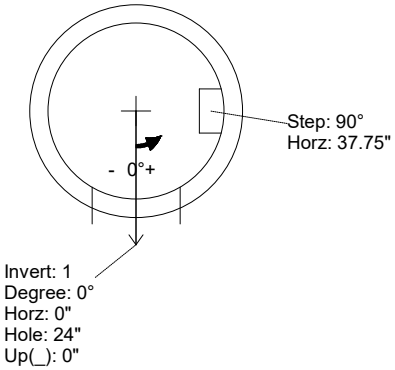

INSIDE WALL DIMENSIONS

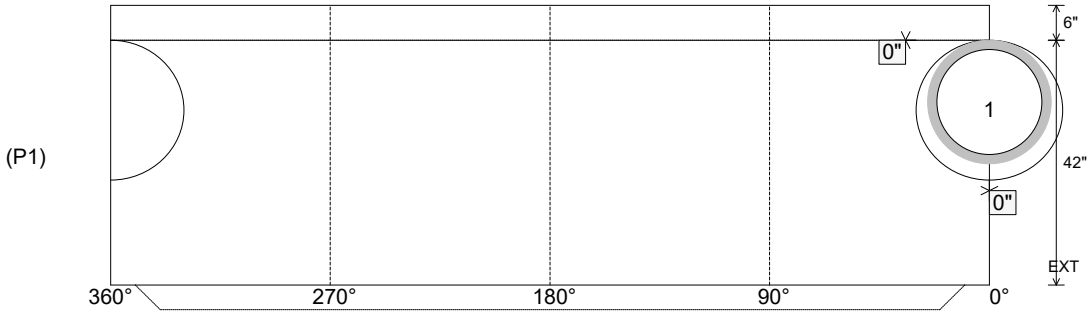

Coating (Int): Coating (Ext):	Seam Up: Tongue Seam Dn: n/a	Wall Thickness: 5" Floor Height: 6"	Height (Int): 42" Height (Ext): 48"	Weight (Net): 4067 lb Volume (Net): 1.04cu.yd