| | | | |
|---|---|---|---|
| Job Name: 26-1822 - Project Versailles<br>Job Location: Versailles, KY<br>Contractor: KY Earthworks | Plant: 100<br>9/24/2026 11:31:51 AM | Tech: Jared - F<br>PC: E. Bradley | |

## Structure ID: A3.2 ST-CI

**P1 MH048BAVF** **MH BASE Custom Ht T/n**

| | |
|---|---|
| P3) 24" x 36" - CASTING HEIGHT - 6" | 0 lb |
| P2) 48" - MH FLAT TOP w/24"x36" Hole F/G - 12" | 1300 lb |
| P1) 48" - MH BASE Custom Ht T/n - 44" | 3772 lb |
| 1) CASTING - HOE 525 LV SET (F/G/H) | 442 lb |
| 1) 48" - Conseal CS-102 1.00" | 0 lb |
| 1) 24" x 36" - Conseal CS-102 1.00" | 0 lb |
| 2) Hole - 30 | 0 lb |
| 4) MH Step ML-10-TDS-NCR - 10" | 0 lb |
| Structure Total: | 5514 lb |

Structure Notes: .
1. PER ASTM C478 SPECIFICATIONS.
2. CONCRETE = 4,000 PSI AT 28 DAYS.
3. NO INVERT CHANNEL.
4. CASTING BY ICAST (HOE 525 LV SET (F/G/H))

.
REINFORCING PER ASTM A615 (GRADE 60).
- TOP SLAB (As .62) #5 BARS AT 6" C.C.E.W..
- RISER/WALLS (As .12)
- FLOOR (As .31) #5 BARS AT 12" C.C.E.W.

Rim: 928.93' Rim to Invert: 5.14' Slack: 1.58" Sump: 1.9" Step Position: 90°

| Position | Elev | Angle | Ext. (cw) | Pipe | Pipe OD | Connector | Hole | Horz Size | Up (_) | Offset |
|---|---|---|---|---|---|---|---|---|---|---|
| Invert 1 | 923.79' | 0° | 0" | 24" HDPE | 27.8" | Hole 30 | 30" | 32.406" | 0" | 0" |
| Invert 2 | 923.79' | 180° | 91.125" | 24" HDPE | 27.8" | Hole 30 | 30" | 32.406" | 0" | 0" |
| Invert 3 | | | | | | | | | | |
| Invert 4 | | | | | | | | | | |
| Invert 5 | | | | | | | | | | |
| Invert 6 | | | | | | | | | | |
| Invert 7 | | | | | | | | | | |
| Invert 8 | | | | | | | | | | |

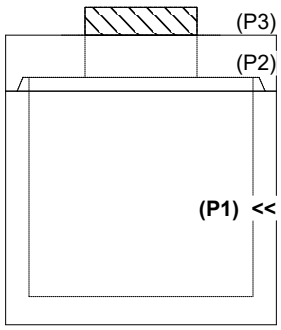


RIGHT-SIDE UP VIEW (int. dimensions)

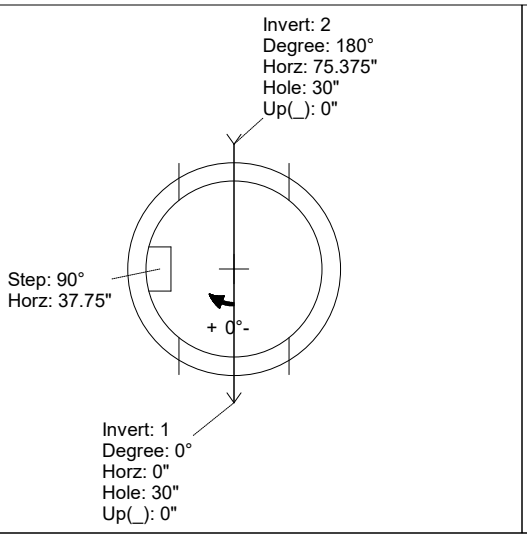


UPSIDE-DOWN VIEW (int. dimenions)

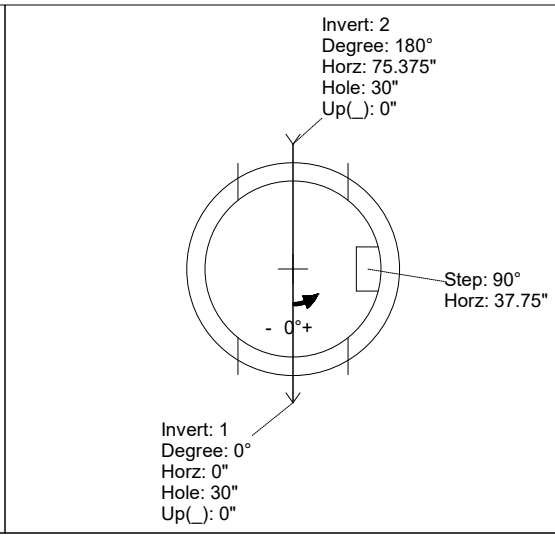


INSIDE WALL DIMENSIONS

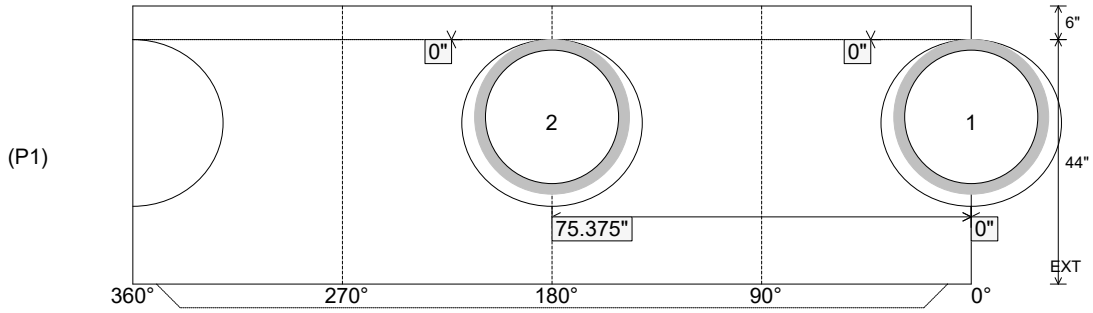


| | | | | |
|---|---|---|---|---|
| Coating (Int):<br>Coating (Ext): | Seam Up: Tongue<br>Seam Dn: n/a | Wall Thickness: 5"<br>Floor Height: 6" | Height (Int): 44"<br>Height (Ext): 50" | Weight (Net): 3772 lb<br>Volume (Net): 0.96cu.yd |