Job Name: 26-1822 - Project Versailles - Sanitary
Job Location: Versailles, KY
Contractor: KY Earthworks

PC: E. Bradley
TECH: Jared - F
Plant: 100

Structure ID: **T5.1 SS-MH**

Spec: Sanitary	Rim: 933.98'	Sump: 2"	Floor (Bot): 925.303'
Type: SAN.MH	Invert: 925.97'	Floor (Top): 925.803'	Overall Height: 8.583'
Size: 48"	Rim to Invert: 8.01'	Floor Height: 6"	Slack: 1.12"

Structure Notes: .
1. PER ASTM C478 SPECIFICATIONS.
2. CONCRETE = 4,000 PSI AT 28 DAYS.
3. NO STEPS
4. CASTING BY ICAST (HOE MC-375 F/C SANITARY)

.
REINFORCING PER ASTM A615 (GRADE 60).
- CONE (As .12)
- RISER/WALLS (As .12)
- FLOOR (As .31) #5 BARS AT 12" C.C.E.W.

STRUCTURE SUMMARY:

P4)	24" - CASTING HEIGHT - 7"	0 lb
P3)	48" - ECC CONE w/ 24" HOLE NO STEP - 30"	2050 lb
P2)	48" - MH RISER NO STEPS - 36"	2515 lb
P1)	48" - MH BASE NO STEP - 24"	2959 lb
1)	JOINT WRAP - 0.065"x6"x50' CONSEAL CS212	0 lb
1)	JOINT WRAP PRIMER - CONSEAL CS-75 (1 gal.)	0 lb
1)	48" - MH INVERT CHANNEL - FULL HEIGHT	1440 lb
1)	CASTING - HOE MC-375 F/C Sanitary	271 lb
2)	48" - Conseal CS-102 1.00" (Double)	0 lb
1)	24" - Conseal CS-102 1.00" (Double)	0 lb
1)	A-Lok - 0285	1 lb
1)	A-Lok - 0200	1 lb
	Structure Total:	9237 lb

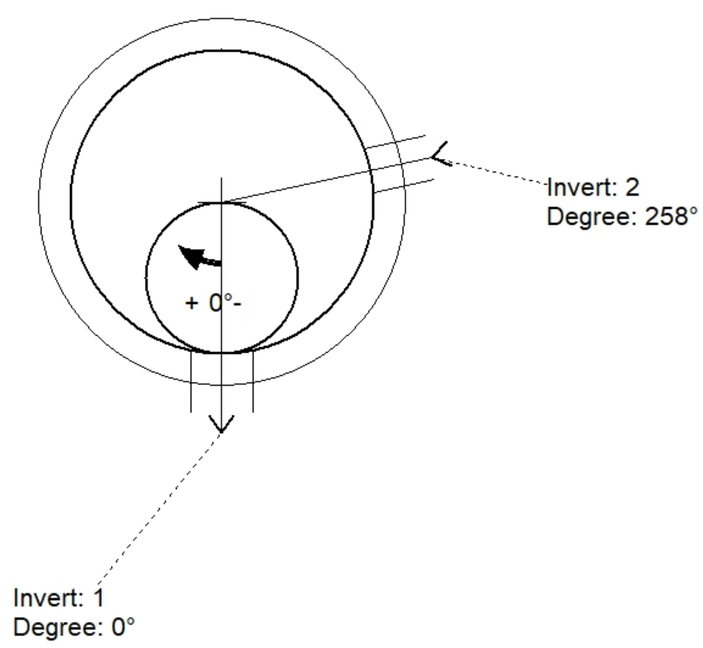

Position	Elev	Angle	Pipe	Pipe OD	Hole	Connector	Up (_)	Ref
Rim	933.98'							
Reducer								
Invert 1	925.97'	0°	8" PVC SDR35	8.5"	9.75"	A-Lok 0285	1.125"	P1
Invert 2	926.17'	258°	6" PVC SDR35	6.25"	7"	A-Lok 0200	3.9"	P1
Invert 3								
Invert 4								
Invert 5								
Invert 6								
Invert 7								
Invert 8								

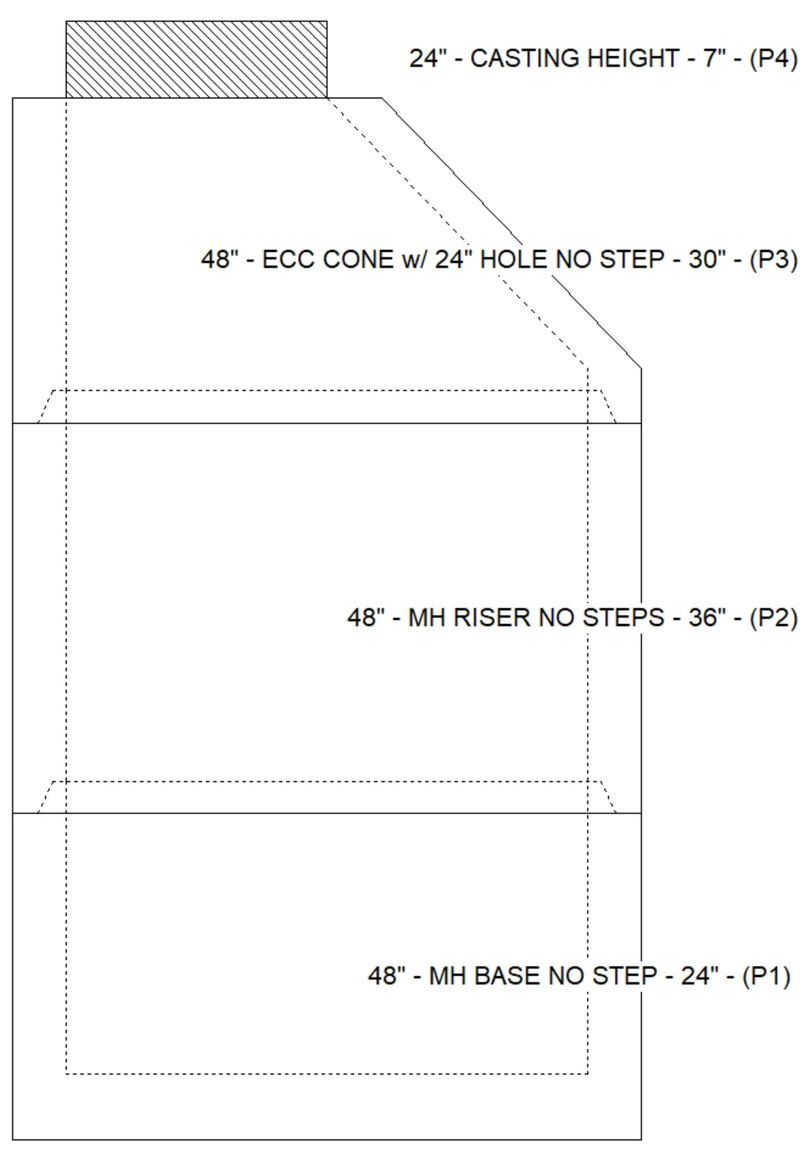

Default - Interior Dimensions

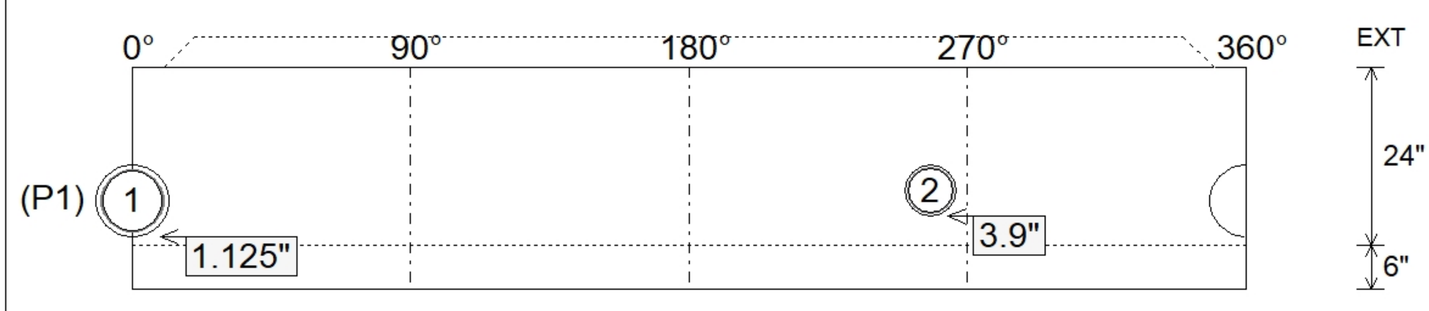

Submittal Drawing
8/31/2026 4:00:54 PM

SUBMITTAL
APPROVED BY: