Job Name: 26-1822 - Project Versailles Job Location: Versailles, KY Contractor: KY Earthworks	Plant: 100 8/27/2026 12:52:14 PM	Tech: Jared - F PC: E. Bradley	

Structure ID: GT1500-3

P1 BX072144-06W06F-VF **BOX BASE 6inW, 6inF, Variable Ht F/n**

P3) 24" - CASTING HEIGHT - 7"	0 lb
P2) 72" x 144" - CB FLAT TOP 6"W w/(2) 24" HOLES (Grease Trap) F/F - 8"	9083 lb
P1) 72" x 144" - BOX BASE 6inW, 6inF, Variable Ht F/n - 48"	17557 lb
2) CASTING - HOE MC-315 F/C Grease	516 lb
1) 72" x 46" - BAFFLE WALL (GT-1500 GAL.) - 4"	1073 lb
1) JOINT WRAP - 0.065"x6"x50' CONSEAL CS212	0 lb
1) JOINT WRAP PRIMER - CONSEAL CS-75 (1 gal.)	0 lb
1) 72" x 144" - Conseal CS-102 1.00" (Double)	0 lb
1) 24" - Conseal CS-102 1.00" (Double)	0 lb
2) Hole - 8	0 lb
1) Hole - 5	0 lb
Structure Total:	28229 lb

Structure Notes: .
1. PER ASTM C-890-13 SPECIFICATIONS.
2. CONCRETE = 5,000 PSI AT 28 DAYS.
3. NO STEPS AND NO FLOW CHANNEL.
4. CASTING BY ICAST (2 EA. HOE MC-315 F/C GREASE)
5. SECOND POUR REQ'D - BAFFLE WALL.

.
REINFORCING PER ASTM A615 (GRADE 60).
- TOP SLAB (As .47) #5 BARS AT 8" C.C.E.W.
- WALLS (As .47) #5 BARS AT 8" C.C.E.W.
- FLOOR (As .47) #5 BARS AT 8" C.C.E.W.

Rim: 5.25' Rim to Invert: 2.42' Slack: 0" Sump: 33.96" Step Position: 0°

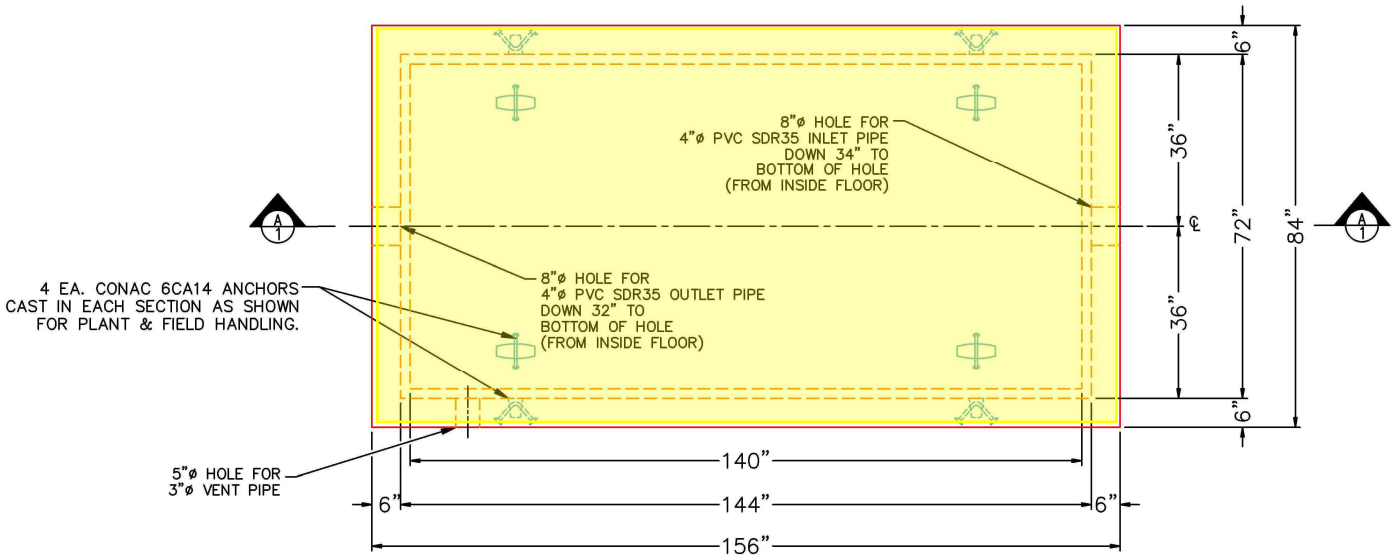

PLAN VIEW
(UPSIDE-DOWN)

FIRST POUR DRAWING

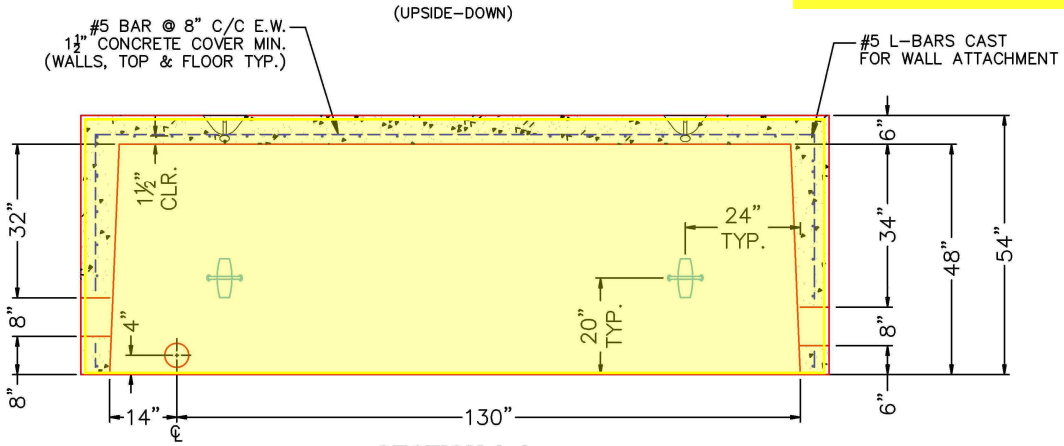

SECTION A-A
(UPSIDE-DOWN)

NOTES:
1. PER ASTM C-890-13 LATEST REVISION.
2. CONCRETE = 5,000 PSI AT 28 DAYS.
3. REINFORCING PER ASTM A615 (GRADE 60). (H-20 TRAFFIC RATED DESIGN)
4. SEALED WITH 1" CS-102 (DOUBLE). (6 EA. 14.5' ROLLS REQ'D.)
5. POUR BASE, THEN POUR INTERIOR BAFFLE.
6. FIRST POUR (BASE) - 19,277 LBS

Coating (Int): Coating (Ext):	Seam Up: Flat Seam Dn: n/a	Wall Thickness: 6" Floor Height: 6"	Height (Int): 48" Height (Ext): 54"	Weight (Net): 17557 lb Volume (Net): 4.49cu.yd

Job Name: 26-1822 - Project Versailles Job Location: Versailles, KY Contractor: KY Earthworks	Plant: 100 8/27/2026 12:52:14 PM	Tech: Jared - F PC: E. Bradley	

Structure ID: GT1500-3

P1 BX072144-06W06F-VF **BOX BASE 6inW, 6inF, Variable Ht F/n**

P3) 24" - CASTING HEIGHT - 7"	0 lb
P2) 72" x 144" - CB FLAT TOP 6"W w/(2) 24" HOLES (Grease Trap) F/F - 8"	9083 lb
P1) 72" x 144" - BOX BASE 6inW, 6inF, Variable Ht F/n - 48"	17557 lb
2) CASTING - HOE MC-315 F/C Grease	516 lb
1) 72" x 46" - BAFFLE WALL (GT-1500 GAL.) - 4"	1073 lb
1) JOINT WRAP - 0.065"x6"x50' CONSEAL CS212	0 lb
1) JOINT WRAP PRIMER - CONSEAL CS-75 (1 gal.)	0 lb
1) 72" x 144" - Conseal CS-102 1.00" (Double)	0 lb
1) 24" - Conseal CS-102 1.00" (Double)	0 lb
2) Hole - 8	0 lb
1) Hole - 5	0 lb
Structure Total:	28229 lb

Rim: 5.25' Rim to Invert: 2.42' Slack: 0" Sump: 33.96" Step Position: 0°

Structure Notes: .
1. PER ASTM C-890-13 SPECIFICATIONS.
2. CONCRETE = 5,000 PSI AT 28 DAYS.
3. NO STEPS AND NO FLOW CHANNEL.
4. CASTING BY ICAST (2 EA. HOE MC-315 F/C GREASE)
5. SECOND POUR REQ'D - BAFFLE WALL.

.
REINFORCING PER ASTM A615 (GRADE 60).
- TOP SLAB (As .47) #5 BARS AT 8" C.C.E.W.
- WALLS (As .47) #5 BARS AT 8" C.C.E.W.
- FLOOR (As .47) #5 BARS AT 8" C.C.E.W.

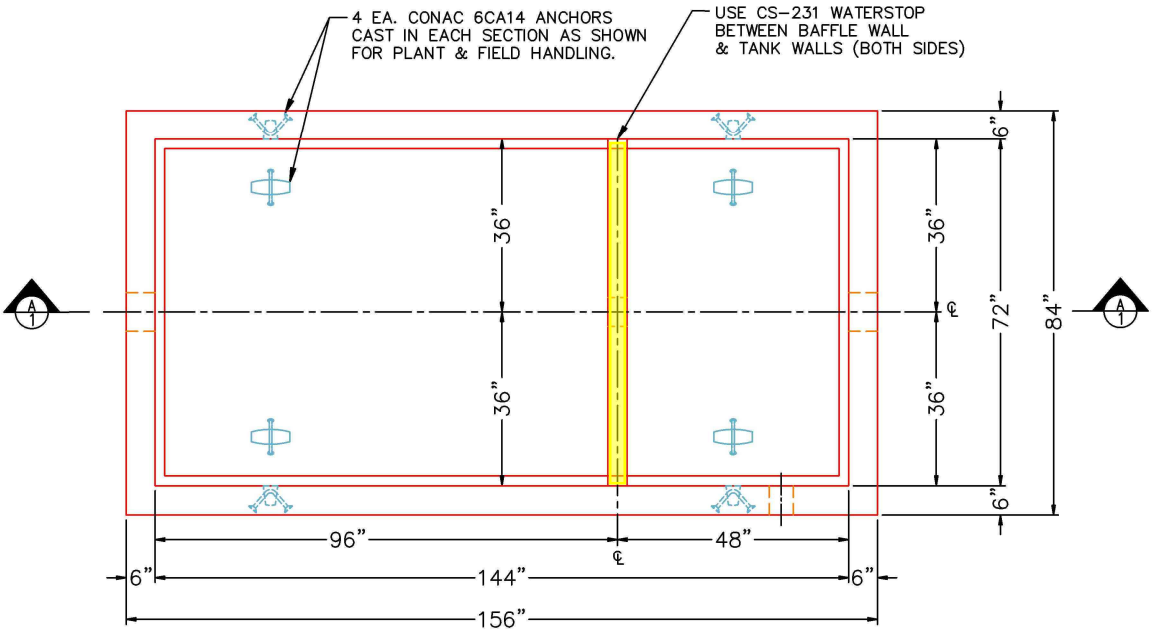

PLAN VIEW
(RIGHTSIDE-UP)

SECOND POUR DRAWING

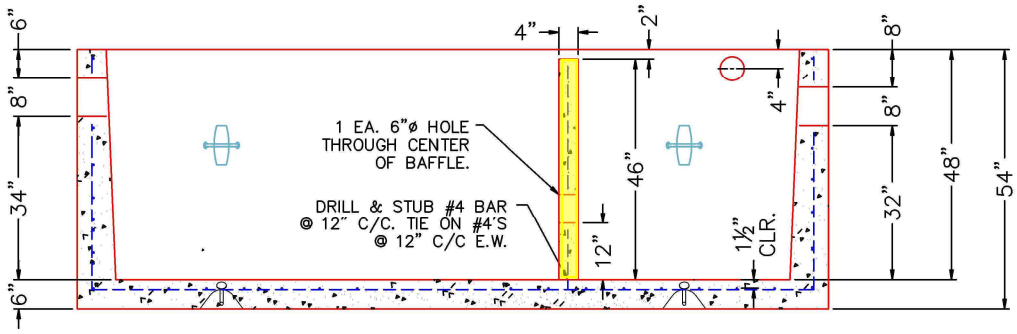

SECTION A-A
(RIGHTSIDE-UP)

NOTES:
1. PER ASTM C-890-13 LATEST REVISION.
2. CONCRETE = 5,000 PSI AT 28 DAYS.
3. REINFORCING PER ASTM A615 (GRADE 60). (H-20 TRAFFIC RATED DESIGN)
4. SEALED WITH 1" CS-102 (DOUBLE). (6 EA. 14.5' ROLLS REQ'D.)
5. POUR BASE, THEN POUR INTERIOR BAFFLE.
6. SECOND POUR (BAFFLE WALL) - 1,103 LBS

Coating (Int): Coating (Ext):	Seam Up: Flat Seam Dn: n/a	Wall Thickness: 6" Floor Height: 6"	Height (Int): 48" Height (Ext): 54"	Weight (Net): 17557 lb Volume (Net): 4.49cu.yd