Job Name: 26-1787 - Kroger Expansion
Job Location: Murray, KY
Contractor: Parker Excavating, LLC.

Plant: 100
7/22/2026 3:25:05 PM

Tech: J. Horsley
PC: J. Jarvis

Structure ID: D2 ST-MH

P1 MH048BA48 MH BASE T/n

P4) 24" - CASTING HEIGHT - 6.50"	0 lb
P3) 48" - ECC CONE w/ 24" HOLE F/G - 30"	2050 lb
P2) 48" - MH RISER T/G - 60"	4192 lb
P1) 48" - MH BASE T/n - 48"	4051 lb
1) CASTING - JBS 1020 F/C DRAIN	361 lb
2) 48" - Conseal CS-102 1.00"	0 lb
1) 24" - Conseal CS-102 1.00"	0 lb
2) Hole - 30	0 lb
12) MH Step ML-10-TDS-NCR - 10"	0 lb
Structure Total:	10654 lb

Structure Notes: .
1. PER ASTM C478 SPECIFICATIONS.
2. CONCRETE = 4,000 PSI AT 28 DAYS.
3. CASTING BY ICAST (JBS 1020 F/C)
.
REINFORCING PER ASTM A615 (GRADE 60).
- CONE (As .12)
- RISER/WALLS (As .12)
- FLOOR (As .31) #5 BARS AT 12" C.C.E.W.

Rim: 504.74' Rim to Invert: 12.12' Slack: 2.89" Sump: 1.95" Step Position: 247°

Position	Elev	Angle	Ext. (cw)	Pipe	Pipe OD	Connector	Hole	Horz Size	Up (_)	Offset
Invert 1	492.62'	0°	0"	24" HP STORM	28"	Hole 30	30"	32.406"	0"	0"
Invert 2	492.68'	134°	67.875"	24" HP STORM	28"	Hole 30	30"	32.406"	0.75"	0"
Invert 3										
Invert 4										
Invert 5										
Invert 6										
Invert 7										
Invert 8										

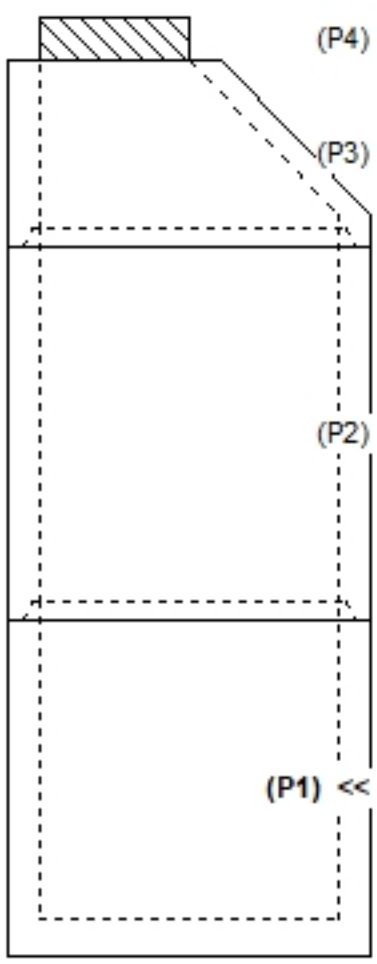

RIGHT-SIDE UP VIEW (int. dimensions)

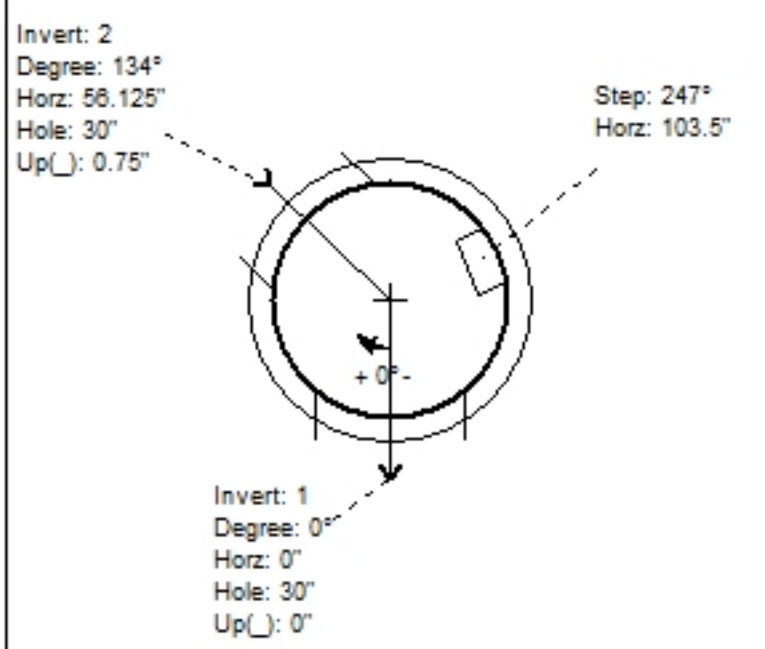

UPSIDE-DOWN VIEW (int. dimenions)

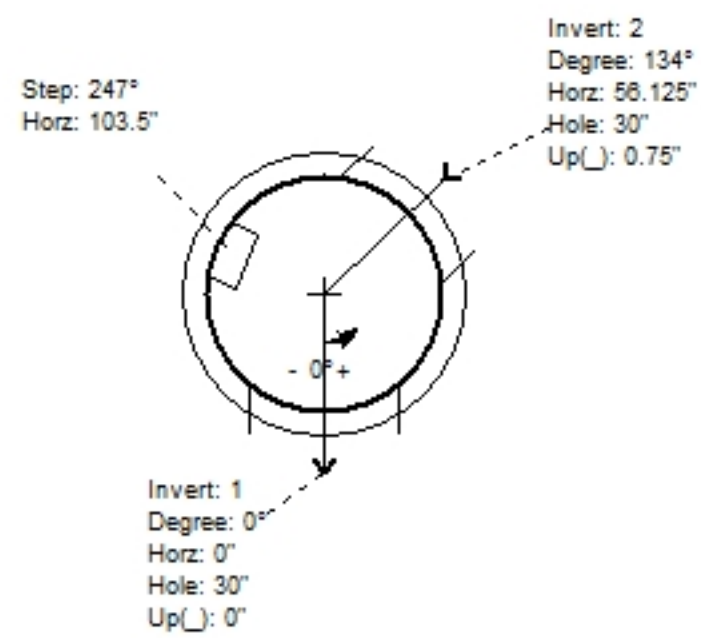

INSIDE WALL DIMENSIONS

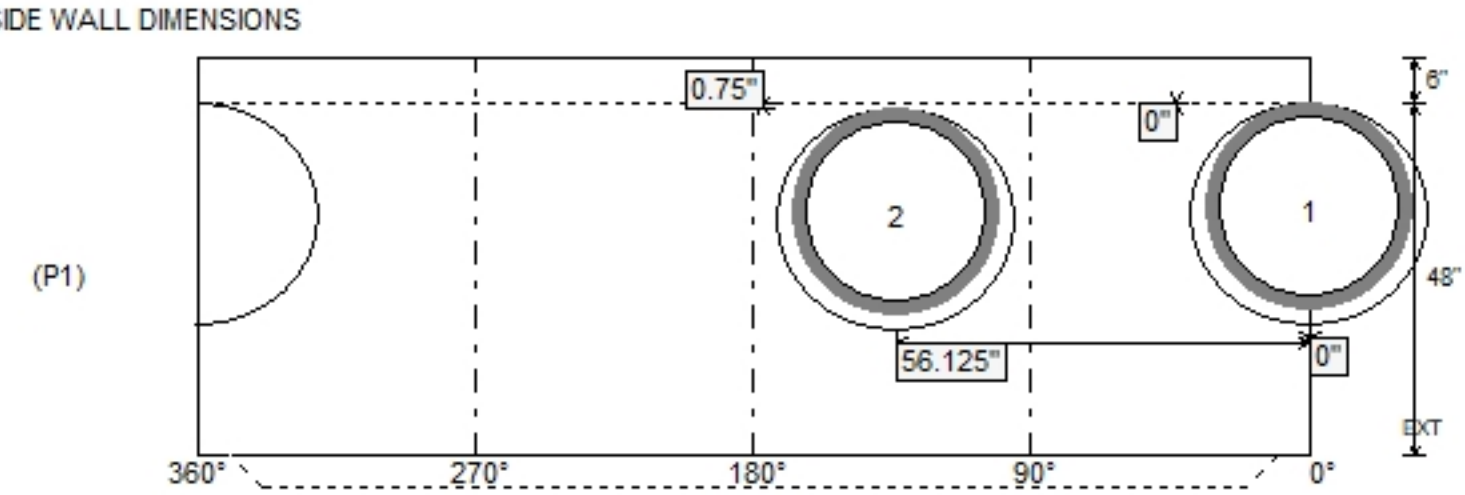

Coating (Int): Coating (Ext):	Seam Up: Tongue Seam Dn: n/a	Wall Thickness: 5" Floor Height: 6"	Height (Int): 48" Height (Ext): 54"	Weight (Net): 4051 lb Volume (Net): 1.03cu.yd