Job Name: 26-1787 - Kroger Expansion Job Location: Murray, KY Contractor: Parker Excavating, LLC.	Plant: 100 7/22/2026 3:26:54 PM	Tech: J. Horsley PC: J. Jarvis	

Structure ID: C5 ST-CI

P4 MH060LD08SP **MH FLAT TOP w/30"x36" Hole F/F**

P6) 6" x 36" - CASTING - Curb Back/Hood - 3.50"	0 lb
P5) 30" x 36" - CASTING - Frame&Grate F/F - 6.50"	0 lb
P4) 60" - MH FLAT TOP w/30"x36" Hole F/F - 8"	2008 lb
P3) 60" - MH RISER Custom Ht F/G - 60"	6207 lb
P2) 60" - MH RISER T/G - 48"	5011 lb
P1) 60" - MH BASE T/n - 48"	7141 lb
1) CASTING - JBS 2064-V SET (F/G/H)	500 lb
3) 60" - Conseal CS-102 1.00"	0 lb
1) Hole - 30	0 lb
1) Hole - 24	0 lb
4) Hole - 6	0 lb
8) MH Step ML-10-TDS-NCR - 10"	0 lb
Structure Total:	20867 lb

Structure Notes: .
1. PER ASTM C478 SPECIFICATIONS.
2. CONCRETE = 4,000 PSI AT 28 DAYS.
3. CASTING BY ICAST (JBS 2064 F/G/H).

.
REINFORCING PER ASTM A615 (GRADE 60).
- TOP SLAB (As .62) #5 BARS AT 6" C.C.E.W..
- RISER/WALLS (As .18)
- FLOOR (As .31) #5 BARS AT 12" C.C.E.W.

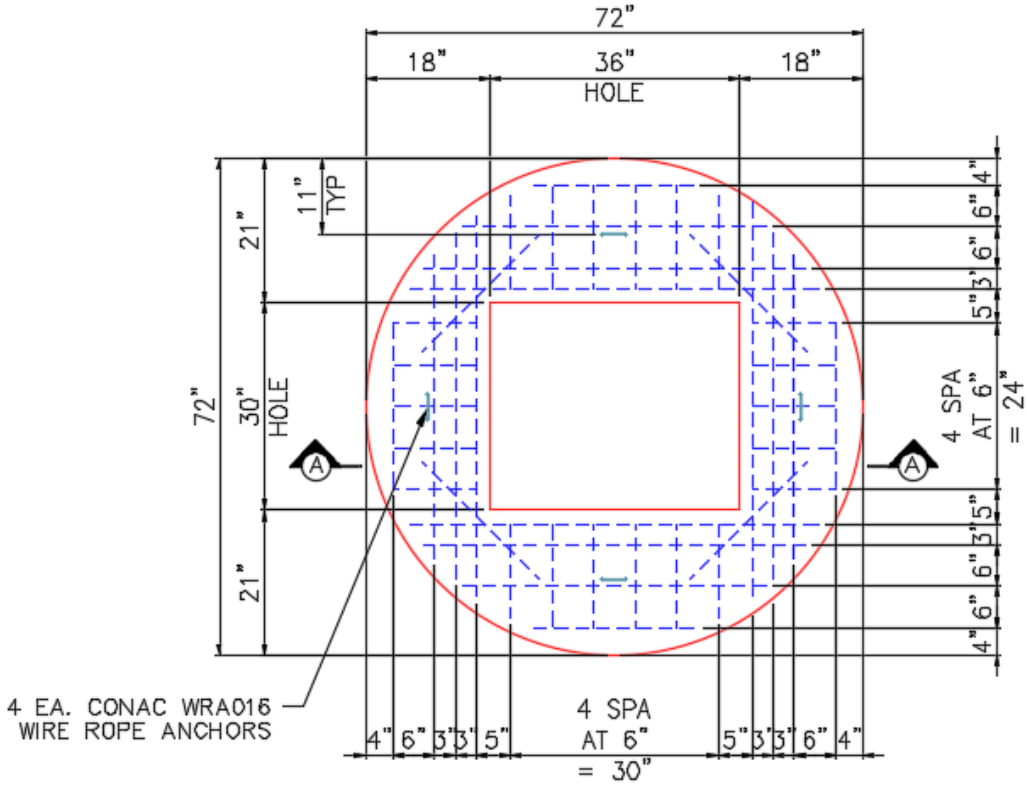

PLAN VIEW

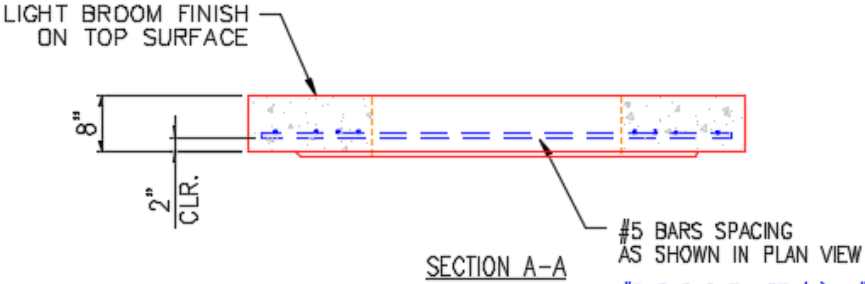

SECTION A-A

#5 BAR CUT LIST (X)	#5 BAR CUT LIST (Y)
2 EA. @ 59"	2 EA. @ 55"
2 EA. @ 55"	2 EA. @ 50"
2 EA. @ 44"	2 EA. @ 43"
2 EA. @ 23"	2 EA. @ 24"
10 EA. @ 12"	8 EA. @ 15"
	4 EA @ 13"

Coating (Int): Coating (Ext):	Seam Up: Flat Seam Dn: Flat	Wall Thickness: 6"	Height (Ext): 8"	Weight (Net): 2008 lb Volume (Net): 0.51cu.yd