**Job Name: 26-1733 - Liberty Power Station**
**Job Location: Liberty, KY**
**Contractor: Weddle Enterprises, Inc**

PC: T. Ryan
TECH: Jared - F
Plant: 100

Structure ID: **CB-36**

| | | | |
|---|---|---|---|
| Spec: Storm | Rim: 1076' | Sump: 3" | Floor (Bot): 1070.05' |
| Type: STM.MH | Invert: 1070.8' | Floor (Top): 1070.55' | Overall Height: 5.917' |
| Size: 48" | Rim to Invert: 5.2' | Floor Height: 6" | Slack: 0.4" |

Structure Notes: .
1. PER ASTM C478 SPECIFICATIONS.
2. CONCRETE = 4,000 PSI AT 28 DAYS.
3. NO INVERT CHANNEL.
4. CASTING SUPPLIED BY OTHERS.

.
REINFORCING PER ASTM A615 (GRADE 60).
- TOP SLAB (As .62) #5 BARS AT 6" C.C.E.W..
- RISER/WALLS (As .18)
- FLOOR (As .37) #5 BARS AT 10" C.C.E.W.

STRUCTURE SUMMARY:

| | |
|---|---|
| P3) 24" - CASTING HEIGHT - 4" | 0 lb |
| P2) 48" - MH FLAT TOP w/ 24" Center Hole - 12" | 1580 lb |
| P1) 48" - MH BASE Custom Ht - 49" | 4027 lb |
| 1) 48" - Conseal CS-102 1.00" | 0 lb |
| 1) 24" - Conseal CS-102 1.00" | 0 lb |
| 2) Hole - 32 | 0 lb |
| 4) MH Step ML-10-TDS-NCR - 10" | 0 lb |
| Structure Total: | 5607 lb |

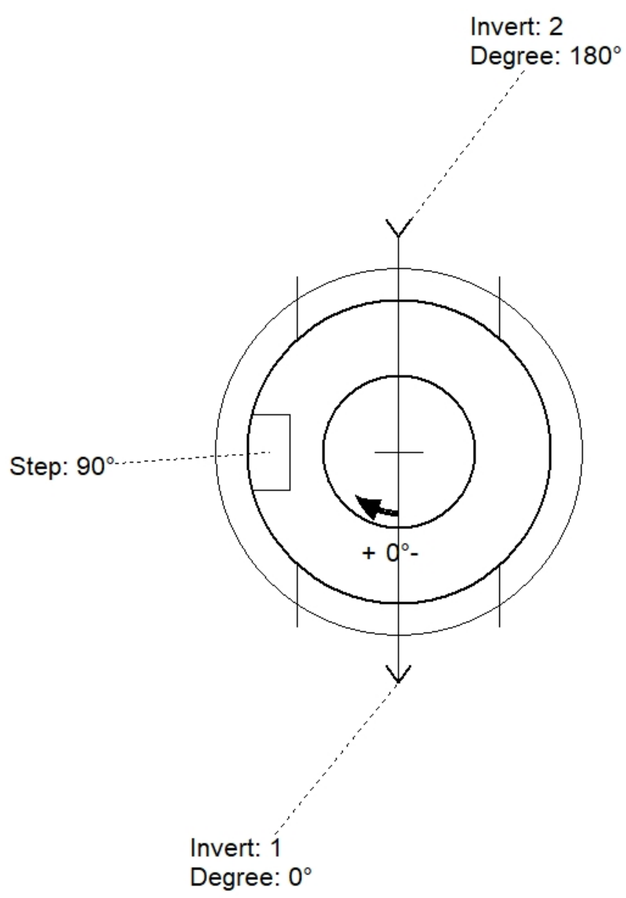


| Position | Elev | Angle | Pipe | Pipe OD | Hole | Connector | Up (_) | Ref |
|---|---|---|---|---|---|---|---|---|
| Rim | 1076' | | | | | | | |
| Reducer | | | | | | | | |
| Invert 1 | 1070.8' | 0° | 24" RCP B WALL | 30" | 32" | Hole 32 | 0" | P1 |
| Invert 2 | 1070.8' | 180° | 24" RCP B WALL | 30" | 32" | Hole 32 | 0" | P1 |
| Invert 3 | | | | | | | | |
| Invert 4 | | | | | | | | |
| Invert 5 | | | | | | | | |
| Invert 6 | | | | | | | | |
| Invert 7 | | | | | | | | |
| Invert 8 | | | | | | | | |

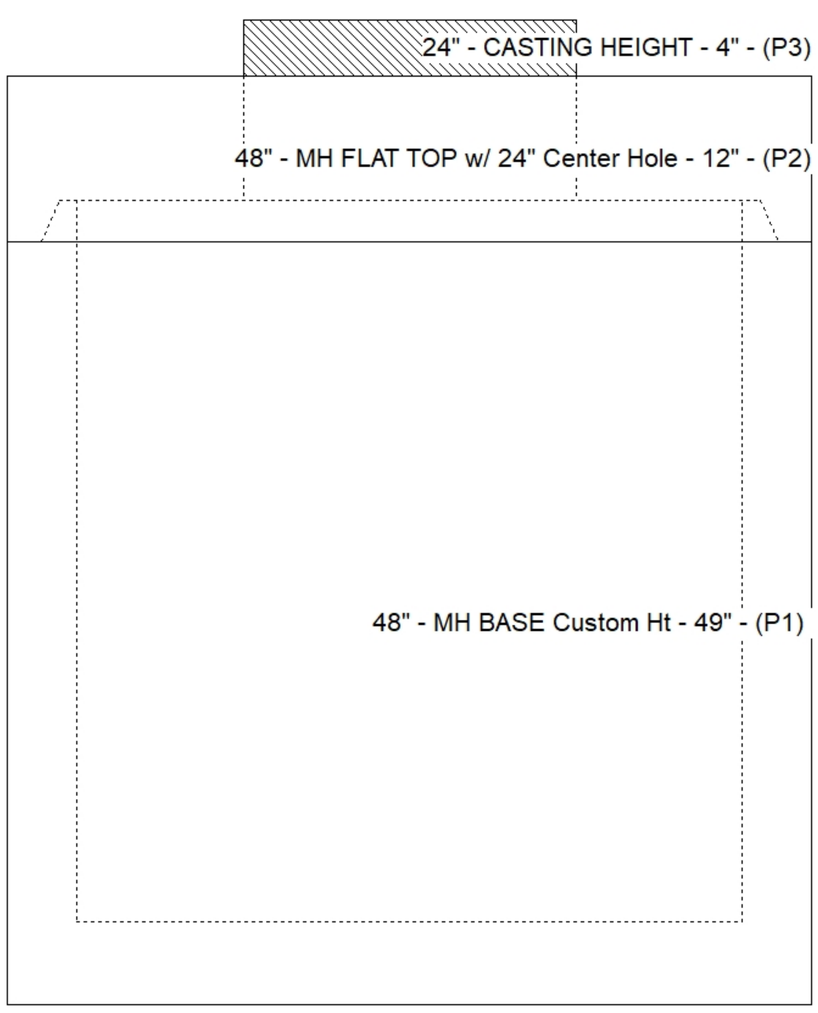


**Default** - Interior Dimensions

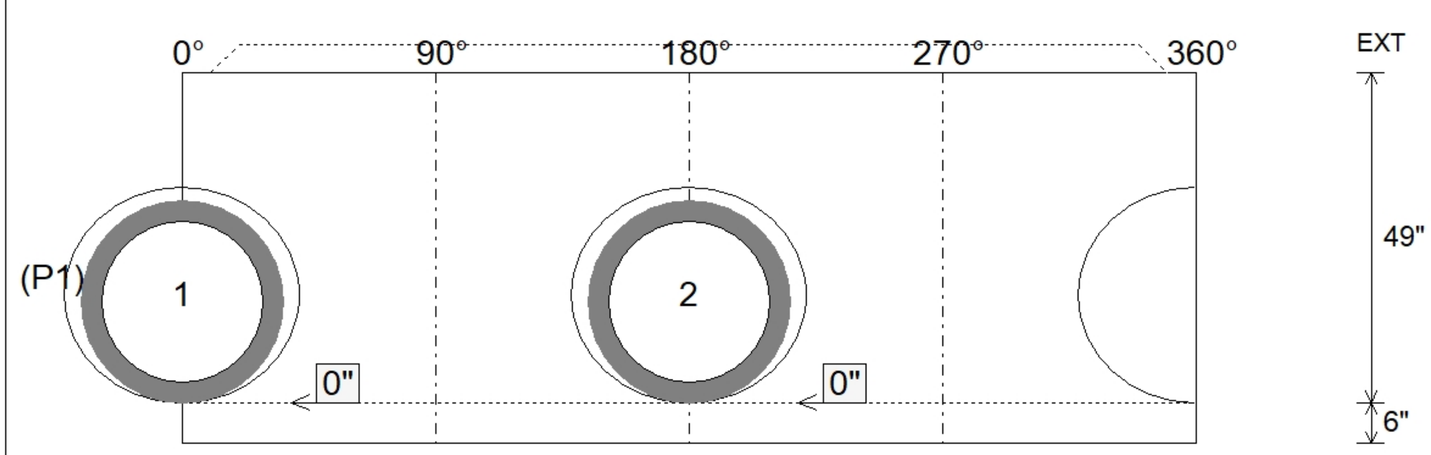


Submittal Drawing
7/21/2026 7:34:21 AM

SUBMITTAL
APPROVED BY: