Job Name: 26-1733 - Liberty Power Station Job Location: Liberty, KY Contractor: Weddle Enterprises, Inc	Plant: 100 7/20/2026 8:30:32 AM	Tech: Jared - F PC: T. Ryan	

Structure ID: CB-31

P2 MH048LD07 **MH FLAT TOP w/ 24" Center Hole**

P3) 24" - CASTING HEIGHT - 4"	0 lb
P2) 48" - MH FLAT TOP w/ 24" Center Hole - 7"	1700 lb
P1) 48" - MH BASE Custom Ht - 47"	3872 lb
1) 48" - Conseal CS-102 1.00"	0 lb
1) 24" - Conseal CS-102 1.00"	0 lb
1) Hole - 32	0 lb
1) Hole - 26	0 lb
1) DOGHOUSE INVRTD - 18"x21"	0 lb
4) MH Step ML-10-TDS-NCR - 10"	0 lb
Structure Total:	5572 lb

Structure Notes: .
1. PER ASTM C478 SPECIFICATIONS.
2. CONCRETE = 4,000 PSI AT 28 DAYS.
3. NO INVERT CHANNEL.
4. CASTING SUPPLIED BY OTHERS.

.
REINFORCING PER ASTM A615 (GRADE 60).
- TOP SLAB (As .62) #5 BARS AT 6" C.C.E.W..
- RISER/WALLS (As .18)
- FLOOR (As .37) #5 BARS AT 10" C.C.E.W.

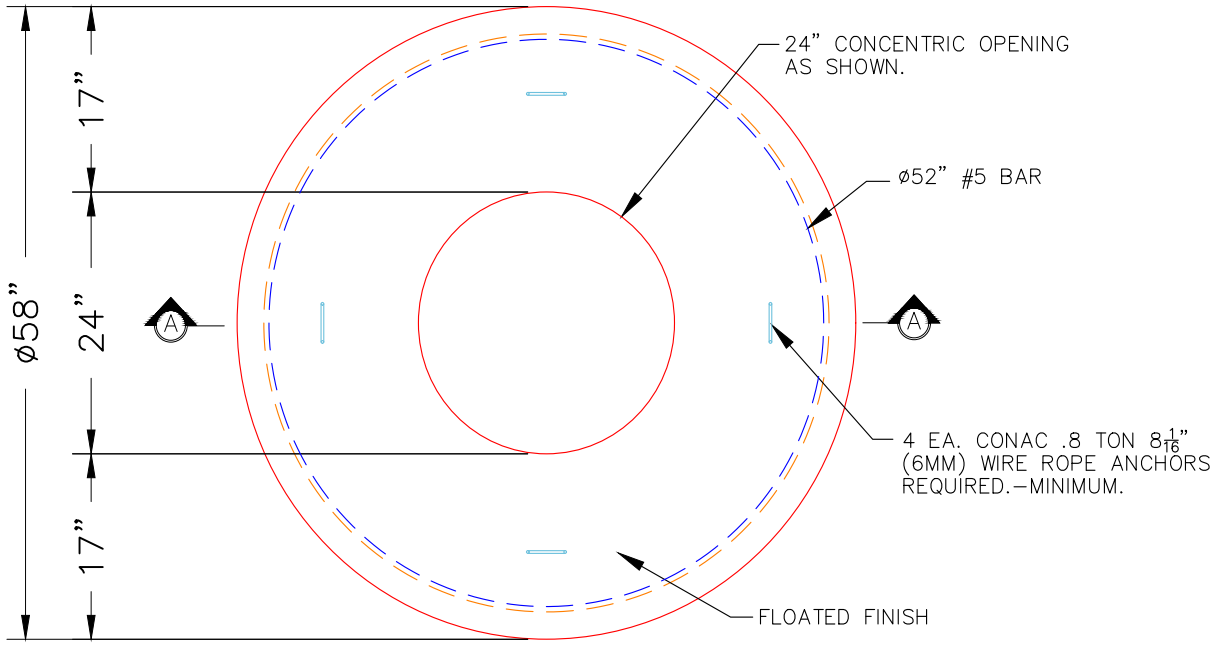

PLAN VIEW

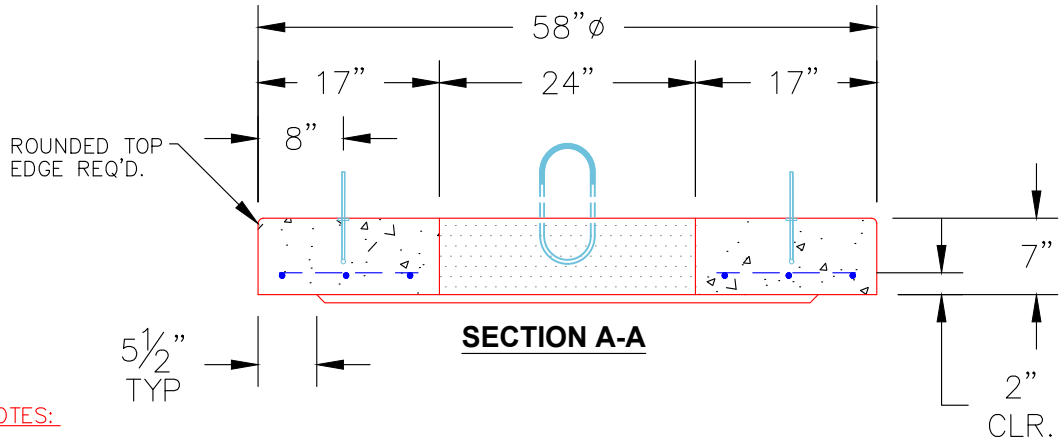

SECTION A-A

NOTES:

1. MANUFACTURED TO ASTM C–478 (LATEST REVISION).
2. CONCRETE: 4,000 PSI AT 28 DAYS.
3. REINFORCING: #5 BAR @ 6" O.C. E.W. (GRADE 60).

Coating (Int): Coating (Ext):	Seam Up: Flat Seam Dn: Flat	Wall Thickness: 5"	Height (Ext): 7"	Weight (Net): 1700 lb Volume (Net): 0.42cu.yd