Job Name: 26-1716 - KYTC McCracken Co Call 100 (264504)
Job Location: Paducah, KY
Contractor: Jim Smith Contracting Co, LLC

PC: A. Chambers
TECH: Jared - A
Plant: 100

Structure ID: **QL2 CBIA**

Spec: KYTC	Rim: 4.67'	Sump: 0"	Floor (Bot): -0.667'
Type: CBI TYPE A (10')	Invert: 0'	Floor (Top): 0'	Overall Height: 5.333'
Size: 24" x 36"	Rim to Invert: 4.67'	Floor Height: 8"	Slack: 0.04"

Structure Notes: .
** KYTC STATE PROJECT **
1. HOE KY-206 F/C (KY TY1) PROVIDED BY ICAST
CAST INTO TOP PHASE TOP.
2. PER KYTC CBI TYPE A / ASTM C913 SPEC'S.
3. CONCRETE = 4,000 PI AT 28 DAYS.
4. NO INVERT CHANNEL.
5. REINFORCING PER ASTM A615 (GRADE 60).
- TOP PHASE (As .62) #5 BARS AT 6" C.C.E.W.
- WALLS (As .31) #5 BARS AT 12" C.C.E.W.
- FLOOR (As .31) #5 BARS AT 12" C.C.E.W.

STRUCTURE SUMMARY:

P3) 24" x 120" - CB INLET KY A 10' TOP LEFT - 10"	3400 lb
P2) 24" x 120" - CB INLET KY A 10' BOTTOM LEFT - 18"	5270 lb
P1) 24" x 36" - BOX BASE 8inW, 8inF, Variable Ht - 28"	3829 lb
1) CASTING - HOE KY-206 F/C (KY TY1)	206 lb
1) 24" x 36" - Conseal CS-102 1.00"	0 lb
1) Hole - 26	0 lb
2) Hole - 8	0 lb
Structure Total:	12705 lb

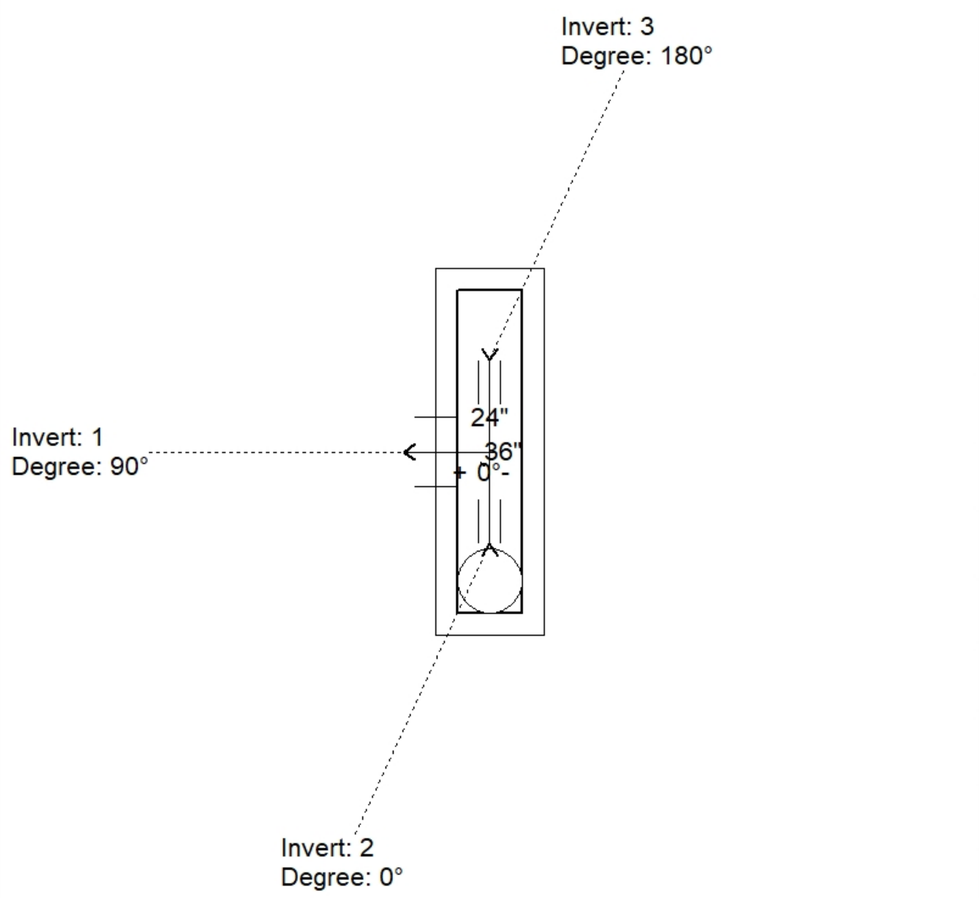

Position	Elev	Angle	Pipe	Pipe OD	Hole	Connector	Up (_)	Ref
Rim	4.67'							
Reducer								
Invert 1	0'	90°	18" RCP B WALL	23"	26"	Hole 26	-4"	P1
Invert 2	1.5'	0°	4" HDPE (perf pipe)	4.8"	8"	Hole 8	16"	P1
Invert 3	1.5'	180°	4" HDPE (perf pipe)	4.8"	8"	Hole 8	16"	P1
Invert 4								
Invert 5								
Invert 6								
Invert 7								
Invert 8								

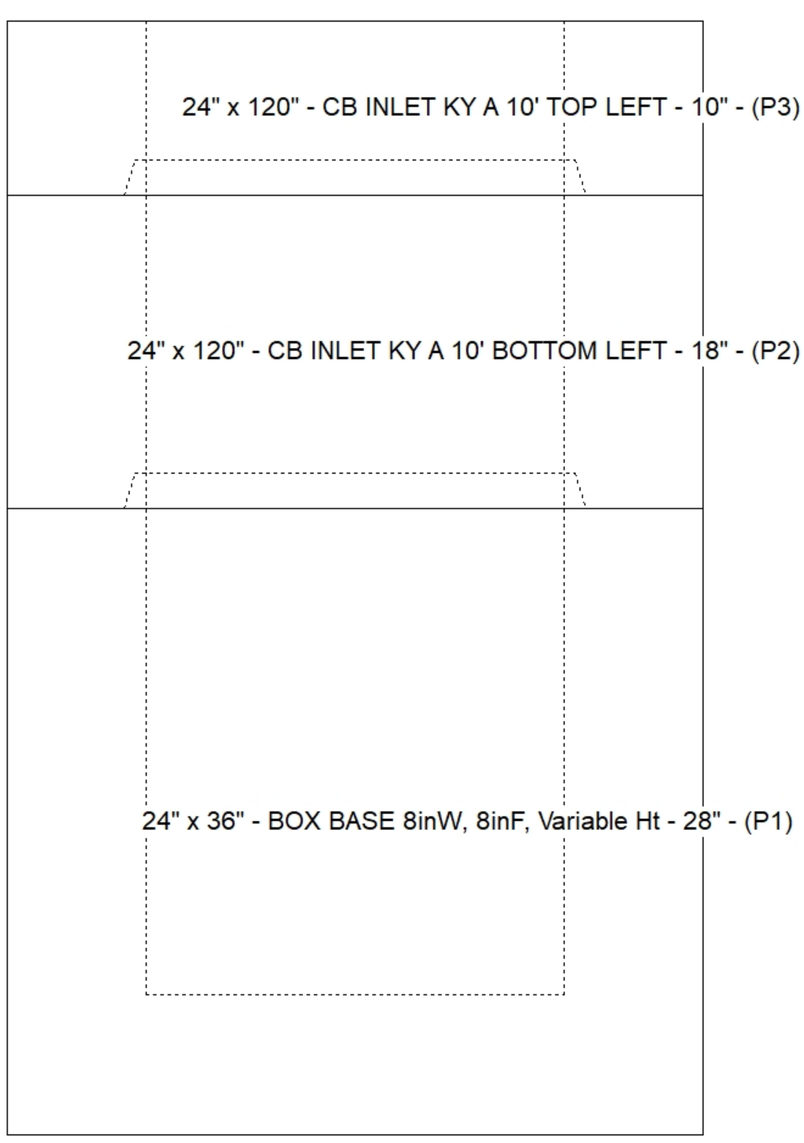

Default - Interior Dimensions

(P1)

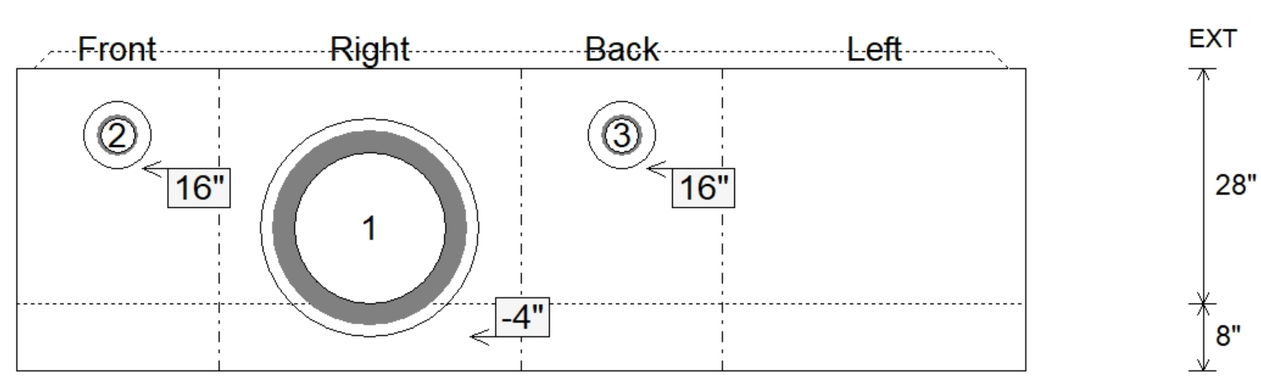

Submittal Drawing
8/11/2026 7:42:17 AM

SUBMITTAL
APPROVED BY: