Job Name: 26-1635 - KYTC Oldham Co (261505) Job Location: Peewee Valley, KY Contractor: Cleary Construction, Inc.	Plant: 100 8/14/2026 1:20:42 PM	Tech: Jared - F PC: T. Ryan	

Structure ID: 48870-134 DBI13G

P1 BX2430-08BA48 BOX BASE 8inW, 8inF T/n

P4) 15" x 27" - P.I.P. - BY OTHERS - 8"	0 lb
P3) 24" x 30" - CB FLAT TOP 8"W w/15"x27" HOLE F/F - 8"	963 lb
P2) 24" x 30" - BOX RISER 8inW F/G - 30"	2803 lb
P1) 24" x 30" - BOX BASE 8inW, 8inF T/n - 48"	4907 lb
2) 24" x 30" - Conseal CS-102 1.00"	0 lb
1) 15" x 27" - Conseal CS-102 1.00"	0 lb
1) Hole - 28	0 lb
1) Hole - 18	0 lb
1) Hole - 22	0 lb
2) Hole - 4	0 lb
Structure Total:	8673 lb

Structure Notes: .
KYTC STATE PROJECT
1. KYTC DBI TYPE 13G / ASTM C-913 SPEC'S.
2. CONCRETE = 4,000 PSI AT 28 DAYS.
3. STUB #5 BARS 6" OUT TOP OF SLAB (SPA@12"C/C).
4. CASTING SUPPLIED BY OTHERS (HOE KY-230-G F/G (GRADE)).
.
REINFORCING PER ASTM A615 (GRADE 60).
- TOP SLAB (As .62) #5 BARS AT 6" C.C.E.W. (DOUBLE MAT)
- WALLS (As .31) #5 BARS AT 12" C.C.E.W..
- FLOOR (As .31) #5 BARS AT 12" C.C.E.W.

Rim: 820.55' Rim to Invert: 7.91' Slack: 0.92" Sump: 0" Step Position:

Position	Elev	Angle	Ext. (cw)	Pipe	Pipe OD	Connector	Hole	Horz Size	Up (_)	Offset
Invert 1	812.64'	90°	23"	24" CMP	25"	Hole 28	28"	28"	-2"	0"
Invert 2	814.52'	270°	23"	15" CMP	16"	Hole 18	18"	18"	21"	0"
Invert 3	812.64'	0°	20"	18" CMP	19"	Hole 22	22"	22"	-2"	0"
Invert 4										
Invert 5										
Invert 6										
Invert 7										
Invert 8										

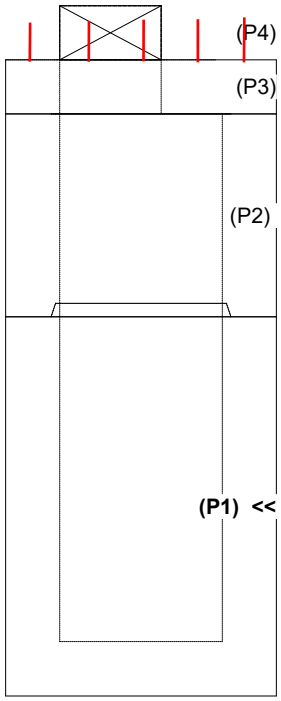

RIGHT-SIDE UP VIEW (int. dimensions)

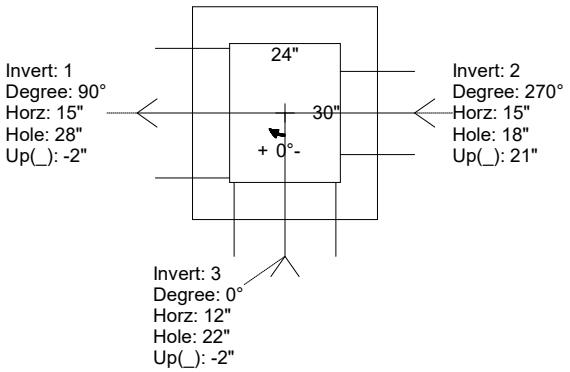

UPSIDE-DOWN VIEW (int. dimenions)

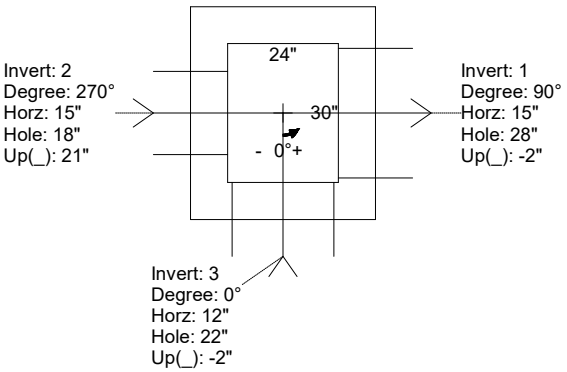

INSIDE WALL DIMENSIONS

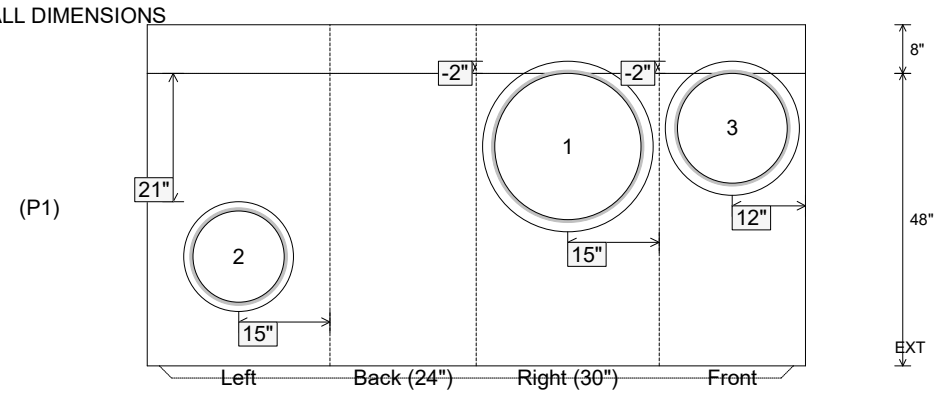

Coating (Int): Coating (Ext):	Seam Up: Tongue Seam Dn: n/a	Wall Thickness: 8" Floor Height: 8"	Height (Int): 48" Height (Ext): 56"	Weight (Net): 4907 lb Volume (Net): 1.25cu.yd