Job Name: 26-1635 - KYTC Oldham Co (261505) - P3
Job Location: Peewee Valley, KY
Contractor: Cleary Construction, Inc.

PC: T. Ryan
TECH: Jared - F
Plant: 100

Structure ID: **51133-96 CBIA**

Spec: KYTC	Rim: 795.15'	Sump: 0"	Floor (Bot): 789.113'
Type: CBI TYPE A (10')	Invert: 789.78'	Floor (Top): 789.78'	Overall Height: 5.75'
Size: 24" x 36"	Rim to Invert: 5.37'	Floor Height: 8"	Slack: 3.44"

Structure Notes: .
** KYTC STATE PROJECT **
1. PER KYTC CBI TYPE A / ASTM C913 SPEC'S.
2. CONCRETE = 4,000 PI AT 28 DAYS.
3. CASTING BY ICAST (HOE KY-206 F/C (KY CBI A)).
.
REINFORCING PER ASTM A615 (GRADE 60).
- TOP PHASE (As .62) #5 BARS AT 6" C.C.E.W.
- WALLS (As .31) #5 BARS AT 12" C.C.E.W.
- FLOOR (As .31) #5 BARS AT 12" C.C.E.W.

STRUCTURE SUMMARY:

P3) 24" x 120" - CB INLET KY A 10' TOP RIGHT - 10"	3398 lb
P2) 24" x 120" - CB INLET KY A 10' BOTTOM RIGHT - 18"	5270 lb
P1) 24" x 36" - BOX BASE 8inW, 8inF, Variable Ht - 33"	3973 lb
1) CASTING - HOE KY-206 F/C (KY CBI A)	206 lb
1) 24" x 36" - Conseal CS-102 1.00"	0 lb
2) Hole - 28	0 lb
1) Hole - 18	0 lb
Structure Total:	12846 lb

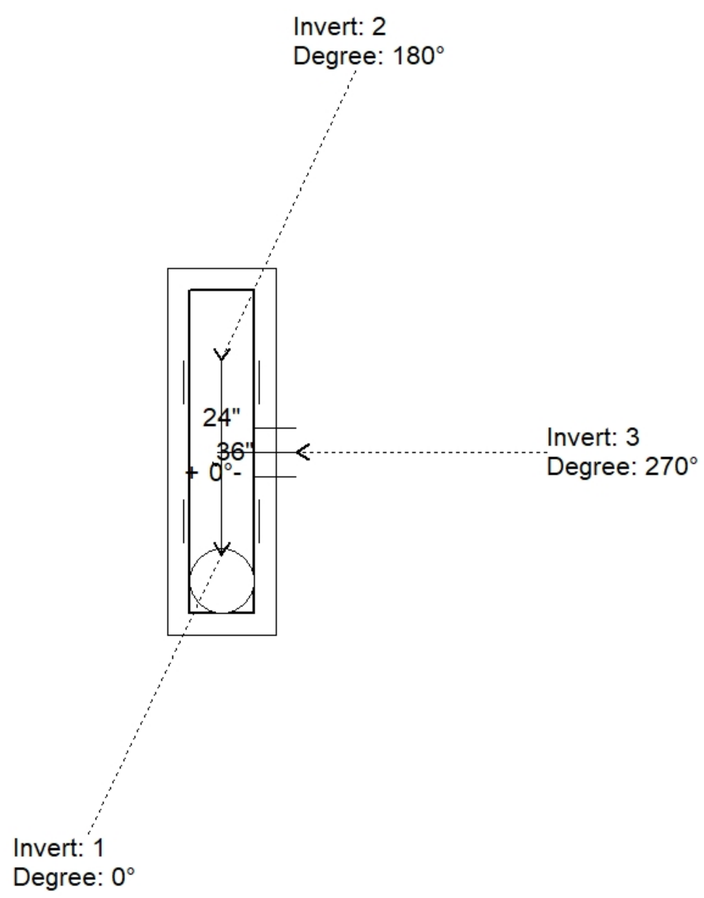

Position	Elev	Angle	Pipe	Pipe OD	Hole	Connector	Up (_)	Ref
Rim	795.15'							
Reducer								
Invert 1	789.78'	0°	24" CMP	25"	28"	Hole 28	-2"	P1
Invert 2	789.78'	180°	24" CMP	25"	28"	Hole 28	-2"	P1
Invert 3	789.78'	270°	15" CMP	16"	18"	Hole 18	-1.5"	P1
Invert 4								
Invert 5								
Invert 6								
Invert 7								
Invert 8								

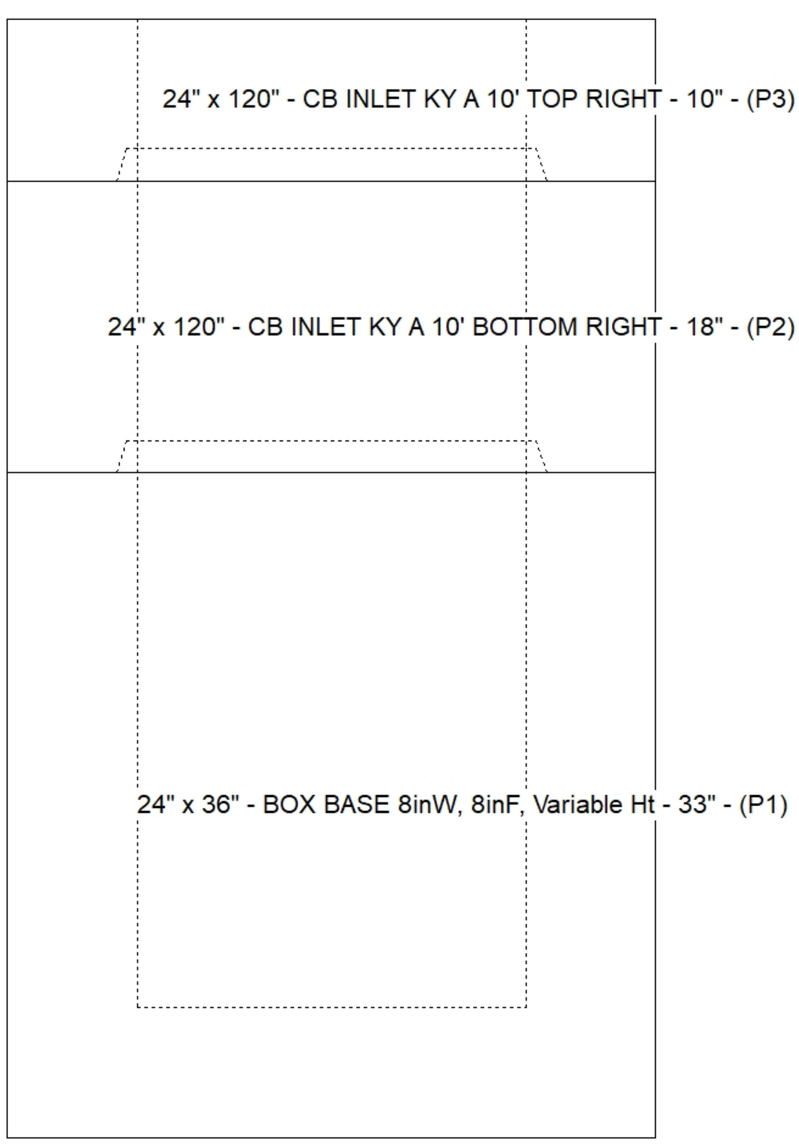

Default - Interior Dimensions

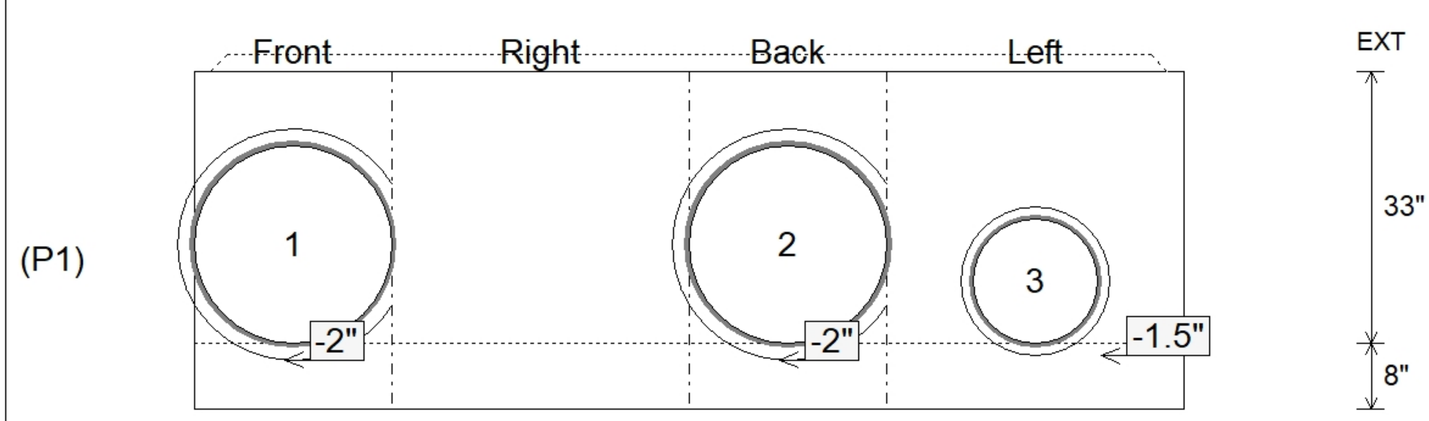

Submittal Drawing
7/29/2026 12:08:47 PM

SUBMITTAL
APPROVED BY: