| | | | |
|---|---|---|---|
| Job Name: 26-1635 - KYTC Oldham Co (261505)<br>Job Location: Peewee Valley, KY<br>Contractor: Cleary Construction, Inc. | Plant: 100<br>7/27/2026 11:36:10 AM | Tech: Jared - F<br>PC: T. Ryan | |

## Structure ID: 50950-90 CBIA

## P1 BX2436-08BA36 BOX BASE 8inW, 8inF T/n

| | |
|---|---|
| P3) 24" x 120" - CB INLET KY A 10' TOP RIGHT F/G - 10" | 3398 lb |
| P2) 24" x 120" - CB INLET KY A 10' BOTTOM RIGHT T/G - 18" | 5270 lb |
| P1) 24" x 36" - BOX BASE 8inW, 8inF T/n - 36" | 4711 lb |
| 1) CASTING - HOE KY-206 F/C (KY CBI A) | 206 lb |
| 1) 24" x 36" - Conseal CS-102 1.00" | 0 lb |
| 2) Hole - 18 | 0 lb |
| Structure Total: | 13585 lb |

Structure Notes: .
** KYTC STATE PROJECT **
1. PER KYTC CBI TYPE A / ASTM C913 SPEC'S.
2. CONCRETE = 4,000 PI AT 28 DAYS.
3. CASTING BY ICAST (HOE KY-206 F/C (KY CBI A)).
.
REINFORCING PER ASTM A615 (GRADE 60).
- TOP PHASE (As .62) #5 BARS AT 6" C.C.E.W.
- WALLS (As .31) #5 BARS AT 12" C.C.E.W.
- FLOOR (As .31) #5 BARS AT 12" C.C.E.W.

Rim: 795.68' Rim to Invert: 5.52' Slack: 2.24" Sump: 0" Step Position:

| Position | Elev | Angle | Ext. (cw) | Pipe | Pipe OD | Connector | Hole | Horz Size | Up (_) | Offset |
|---|---|---|---|---|---|---|---|---|---|---|
| Invert 1 | 790.16' | 20° | 22.5" | 15" CMP | 16" | Hole 18 | 18" | 19.155" | -1.5" | -6.5" |
| Invert 2 | 790.16' | 195° | 21.75" | 15" CMP | 16" | Hole 18 | 18" | 18.635" | -1.5" | -5" |
| Invert 3 | | | | | | | | | | |
| Invert 4 | | | | | | | | | | |
| Invert 5 | | | | | | | | | | |
| Invert 6 | | | | | | | | | | |
| Invert 7 | | | | | | | | | | |
| Invert 8 | | | | | | | | | | |

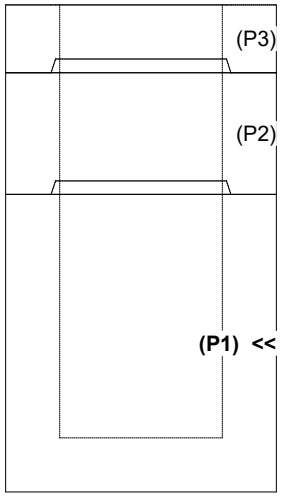


RIGHT-SIDE UP VIEW (int. dimensions)

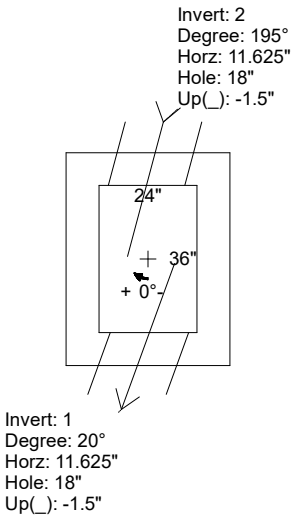


UPSIDE-DOWN VIEW (int. dimenions)

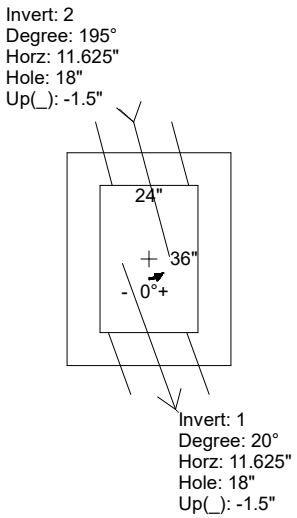


INSIDE WALL DIMENSIONS

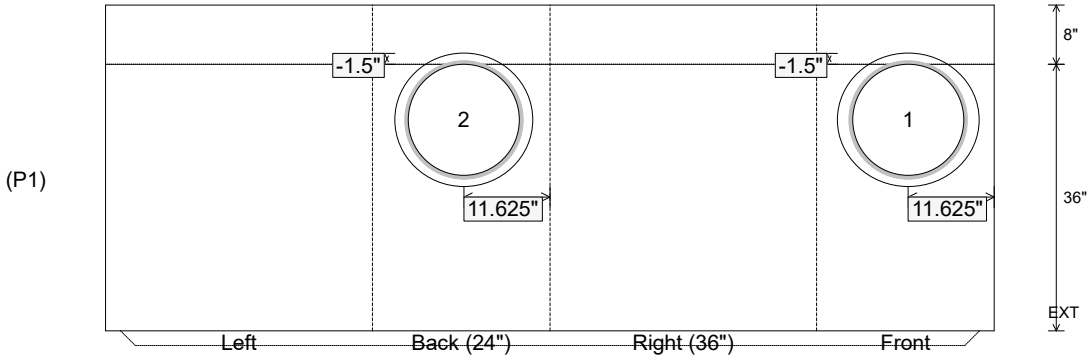


| | | | | |
|---|---|---|---|---|
| Coating (Int):<br>Coating (Ext): | Seam Up: Tongue<br>Seam Dn: n/a | Wall Thickness: 8"<br>Floor Height: 8" | Height (Int): 36"<br>Height (Ext): 44" | Weight (Net): 4711 lb<br>Volume (Net): 1.2cu.yd |