Job Name: 26-1635 - KYTC Oldham Co (261505) - P2
Job Location: Peewee Valley, KY
Contractor: Cleary Construction, Inc.

PC: T. Ryan
TECH: Jared - F
Plant: 100

Structure ID: **17100-43 CBIA-37**

Spec: KYTC	Rim: 840.3'	Sump: 0"	Floor (Bot): 832.623'
Type: CBI TYPE A (10')	Invert: 833.29'	Floor (Top): 833.29'	Overall Height: 7.417'
Size: 36" x 48"	Rim to Invert: 7.01'	Floor Height: 8"	Slack: 3.12"

Structure Notes: .
** KYTC STATE PROJECT **
1. PER KYTC CBI TYPE A / ASTM C913 SPEC'S.
2. CONCRETE = 4,000 PI AT 28 DAYS.
3. CASTING BY ICAST (HOE KY-206 F/C (KY CBI A)).
.
REINFORCING PER ASTM A615 (GRADE 60).
- TOP PHASE (As .62) #5 BARS AT 6" C.C.E.W.
- TRANS. SLAB (As .62) #5 BARS AT 6" C.C.E.W (DBL MAT)
- WALLS (As .31) #5 BARS AT 12" C.C.E.W.
- FLOOR (As .31) #5 BARS AT 12" C.C.E.W.

STRUCTURE SUMMARY:

P4) 24" x 120" - CB INLET KY A 10' TOP LEFT - 10"	3400 lb
P3) 24" x 120" - CB INLET KY A 10' BOTTOM LEFT - 18"	5270 lb
P2) 36" x 48" - CB FT REDUCER 24"X36" HOLE - 8"	1654 lb
P1) 36" x 48" - BOX BASE 8inW, 8inF, Variable Ht - 45"	6696 lb
1) CASTING - HOE KY-206 F/C (KY CBI A)	206 lb
1) 36" x 48" - Conseal CS-102 1.00"	0 lb
1) 24" x 36" - Conseal CS-102 1.00"	0 lb
2) Hole - 34	0 lb
2) Hole - 18	0 lb
1) Hole - 6	0 lb
Structure Total:	17226 lb

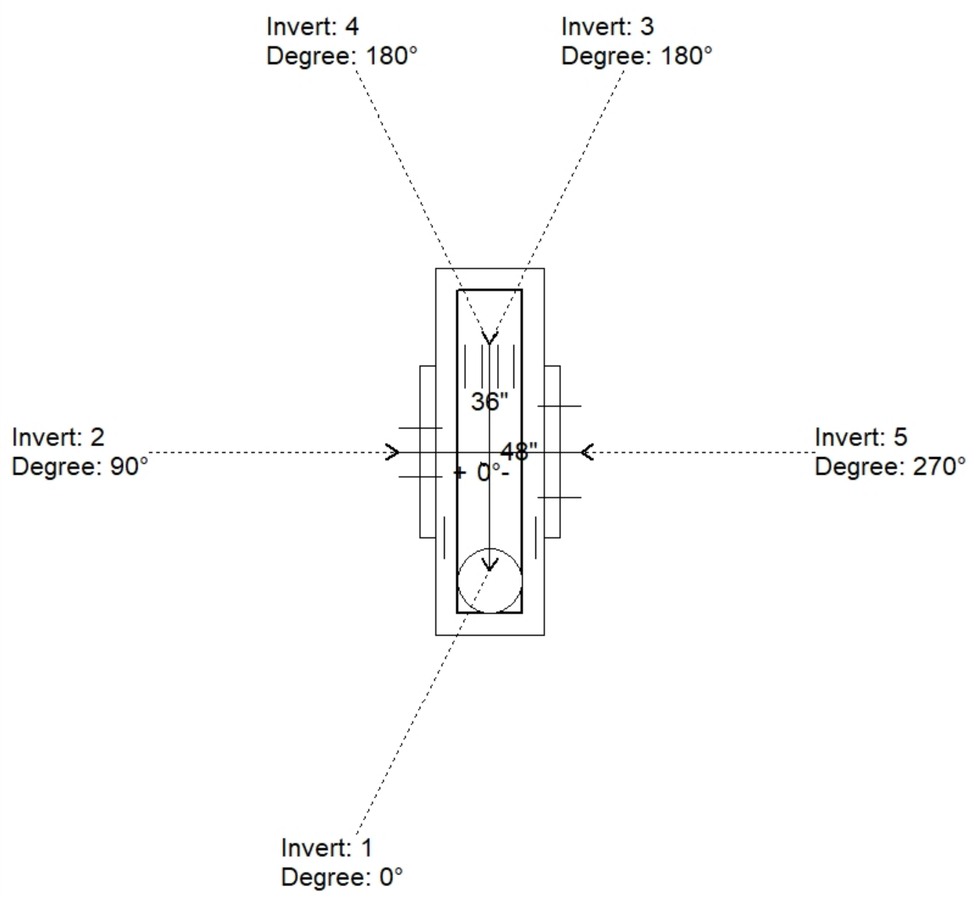

Position	Elev	Angle	Pipe	Pipe OD	Hole	Connector	Up (_)	Ref
Rim	840.3'							
Reducer	837.04'							
Invert 1	833.29'	0°	30" CMP	31"	34"	Hole 34	-2"	P1
Invert 2	833.37'	90°	15" CMP	16"	18"	Hole 18	-0.54"	P1
Invert 3	833.37'	180°	15" CMP	16"	18"	Hole 18	-0.54"	P1
Invert 4	836.29'	180°	4" HDPE (perf pipe)	4.8"	6"	Hole 6	35"	P1
Invert 5	833.37'	270°	30" CMP	31"	34"	Hole 34	-1.04"	P1
Invert 6								
Invert 7								
Invert 8								

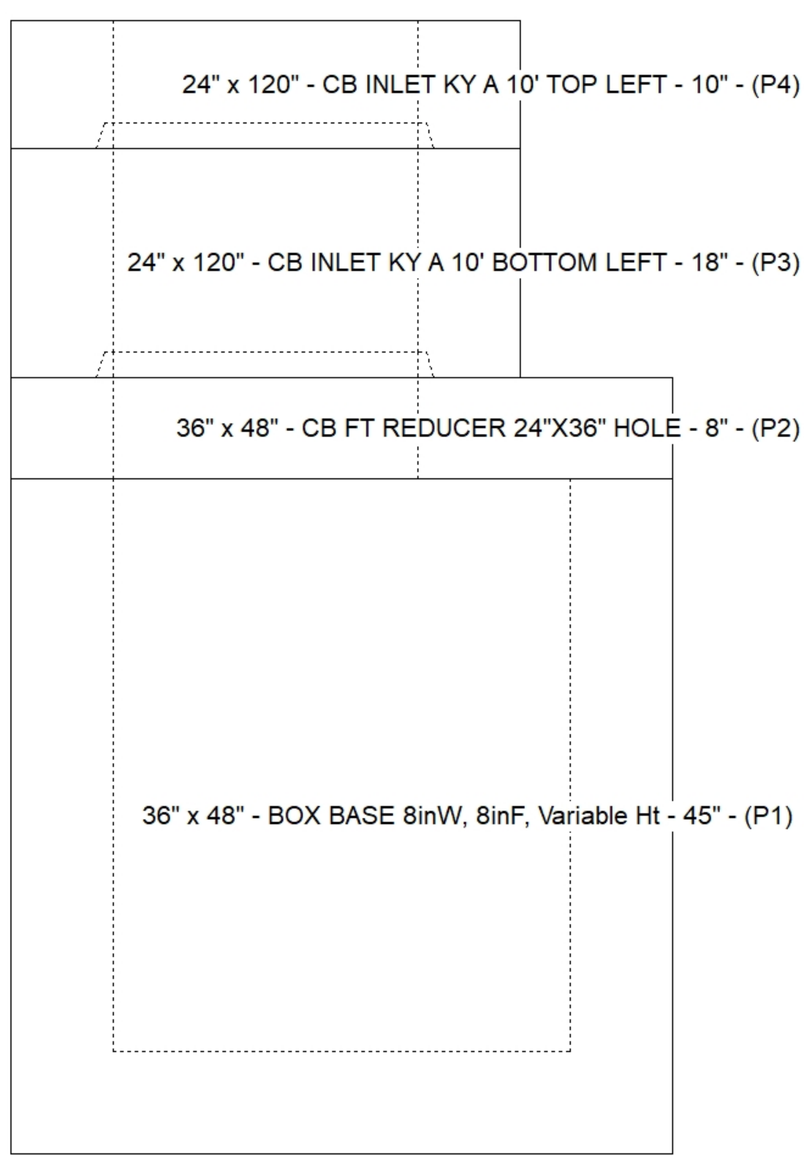

Default - Interior Dimensions

(P1)

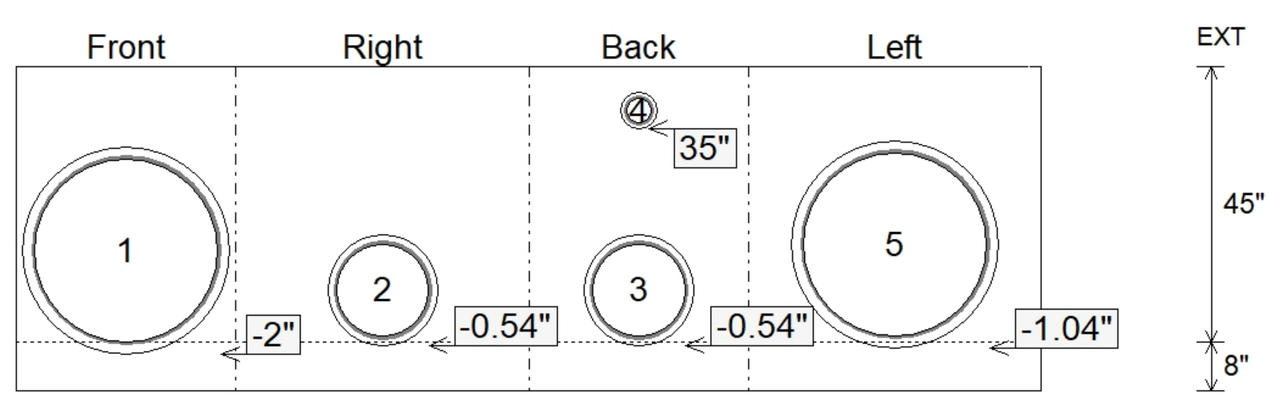

Submittal Drawing
7/28/2026 3:11:04 PM

SUBMITTAL
APPROVED BY: