Job Name: 26-1635 - KYTC Oldham Co (261505) Job Location: Peewee Valley, KY Contractor: Cleary Construction, Inc.	Plant: 100 7/24/2026 2:04:11 PM	Tech: Jared - F PC: T. Ryan	

Structure ID: 16950-42 CBIA-36

P1 BX3636-08BAVF **BOX BASE 8inW, 8inF, Variable Ht F/n**

P4) 24" x 120" - CB INLET KY A 10' TOP LEFT F/G - 10"	3400 lb
P3) 24" x 120" - CB INLET KY A 10' BOTTOM LEFT T/G - 18"	5270 lb
P2) 36" x 36" - CB TRANSITION SLAB 24"X36" HOLE T/F - 8"	1235 lb
P1) 36" x 36" - BOX BASE 8inW, 8inF, Variable Ht F/n - 51"	6603 lb
1) CASTING - HOE KY-206 F/C (KY CBI A)	206 lb
1) 36" x 36" - Conseal CS-102 1.00"	0 lb
1) 24" x 36" - Conseal CS-102 1.00"	0 lb
2) Hole - 34	0 lb
1) Hole - 6	0 lb
Structure Total:	16714 lb

Structure Notes: .
** KYTC STATE PROJECT **
1. PER KYTC CBI TYPE A / ASTM C913 SPEC'S.
2. CONCRETE = 4,000 PI AT 28 DAYS.
3. CASTING BY ICAST (HOE KY-206 F/C (KY CBI A)).
.
REINFORCING PER ASTM A615 (GRADE 60).
- TOP PHASE (As .62) #5 BARS AT 6" C.C.E.W.
- TRANS. SLAB (As .62) #5 BARS AT 6" C.C.E.W (DBL MAT)
- WALLS (As .31) #5 BARS AT 12" C.C.E.W.
- FLOOR (As .31) #5 BARS AT 12" C.C.E.W.

Rim: 833.55' Rim to Invert: 7.51' Slack: 3.12" Sump: 0" Step Position:

Position	Elev	Angle	Ext. (cw)	Pipe	Pipe OD	Connector	Hole	Horz Size	Up (_)	Offset
Invert 1	826.04'	0°	26"	30" CMP	31"	Hole 34	34"	34"	-2"	0"
Invert 2	826.12'	180°	26"	30" CMP	31"	Hole 34	34"	34"	-1"	0"
Invert 3	829.54'	180°	26"	4" HDPE (perf pipe)	4.8"	Hole 6	6"	6"	41"	0"
Invert 4										
Invert 5										
Invert 6										
Invert 7										
Invert 8										

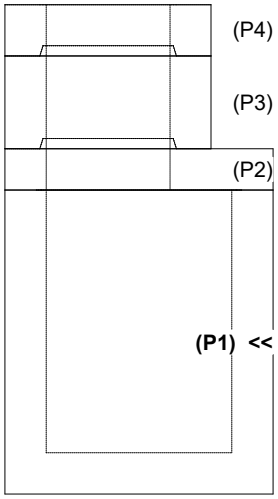

RIGHT-SIDE UP VIEW (int. dimensions)

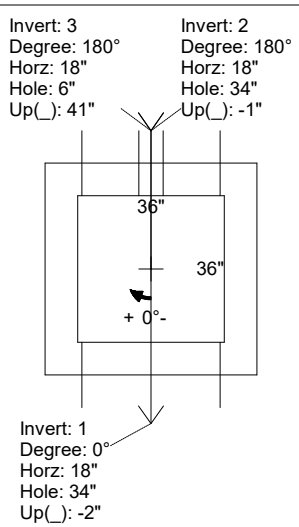

UPSIDE-DOWN VIEW (int. dimenions)

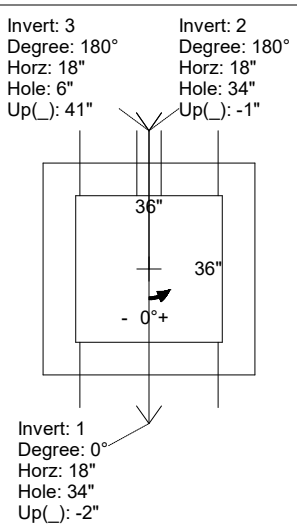

INSIDE WALL DIMENSIONS

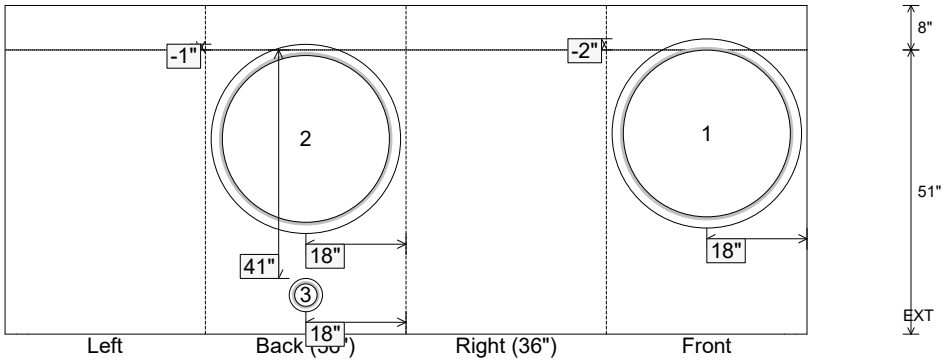

Coating (Int): Coating (Ext):	Seam Up: Flat Seam Dn: n/a	Wall Thickness: 8" Floor Height: 8"	Height (Int): 51" Height (Ext): 59"	Weight (Net): 6603 lb Volume (Net): 1.69cu.yd