Job Name: 26-1635 - KYTC Oldham Co (261505) - P2
Job Location: Peewee Valley, KY
Contractor: Cleary Construction, Inc.

PC: T. Ryan
TECH: Jared - F
Plant: 100

Structure ID: **16846-41 CBIA-35**

Spec: KYTC	Rim: 829.3'	Sump: 0"	Floor (Bot): 821.103'
Type: CBI TYPE A (10')	Invert: 821.77'	Floor (Top): 821.77'	Overall Height: 7.917'
Size: 36" x 48"	Rim to Invert: 7.53'	Floor Height: 8"	Slack: 3.36"

Structure Notes: .
** KYTC STATE PROJECT **
1. PER KYTC CBI TYPE A / ASTM C913 SPEC'S.
2. CONCRETE = 4,000 PI AT 28 DAYS.
3. CASTING BY ICAST (HOE KY-206 F/C (KY CBI A)).
.
REINFORCING PER ASTM A615 (GRADE 60).
- TOP PHASE (As .62) #5 BARS AT 6" C.C.E.W.
- TRANS. SLAB (As .62) #5 BARS AT 6" C.C.E.W (DBL MAT)
- WALLS (As .31) #5 BARS AT 12" C.C.E.W.
- FLOOR (As .31) #5 BARS AT 12" C.C.E.W.

STRUCTURE SUMMARY:

P4) 24" x 120" - CB INLET KY A 10' TOP LEFT - 10"	3400 lb
P3) 24" x 120" - CB INLET KY A 10' BOTTOM LEFT - 18"	5270 lb
P2) 36" x 48" - CB FT REDUCER 24"X36" HOLE - 8"	1654 lb
P1) 36" x 48" - BOX BASE 8inW, 8inF, Variable Ht - 51"	7780 lb
1) CASTING - HOE KY-206 F/C (KY CBI A)	206 lb
1) 36" x 48" - Conseal CS-102 1.00"	0 lb
1) 24" x 36" - Conseal CS-102 1.00"	0 lb
2) Hole - 34	0 lb
1) Hole - 6	0 lb
Structure Total:	18310 lb

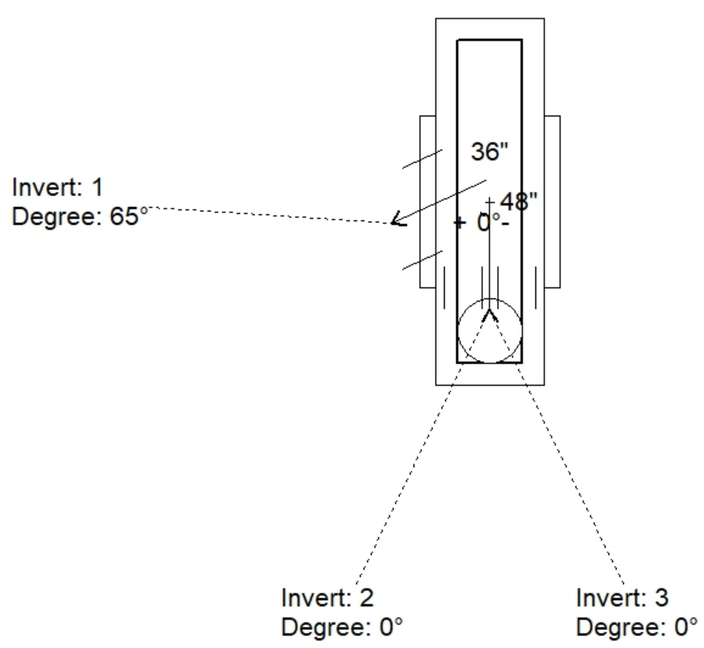

Position	Elev	Angle	Pipe	Pipe OD	Hole	Connector	Up (_)	Ref
Rim	829.3'							
Reducer	826.02'							
Invert 1	821.77'	65°	30" CMP	31"	34"	Hole 34	-2"	P1
Invert 2	821.85'	0°	30" CMP	31"	34"	Hole 34	-1.04"	P1
Invert 3	825.27'	0°	4" HDPE (perf pipe)	4.8"	6"	Hole 6	41"	P1
Invert 4								
Invert 5								
Invert 6								
Invert 7								
Invert 8								

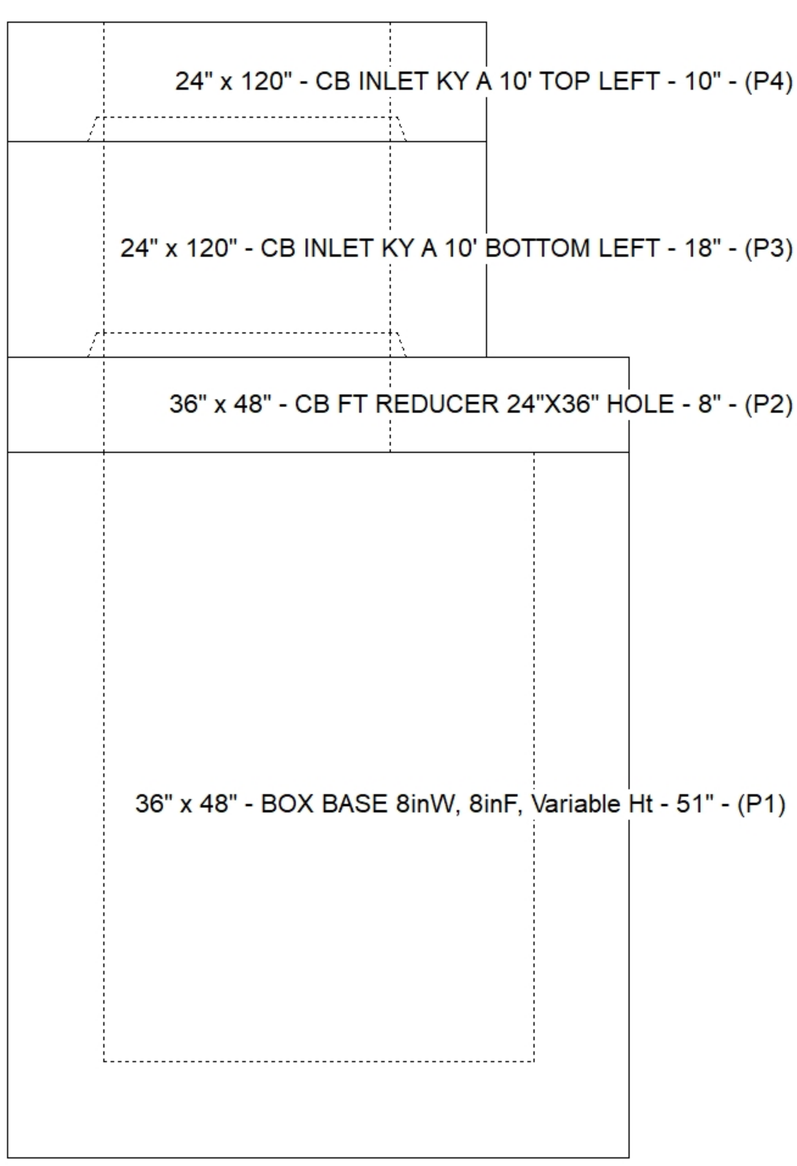

Default - Interior Dimensions

(P1)

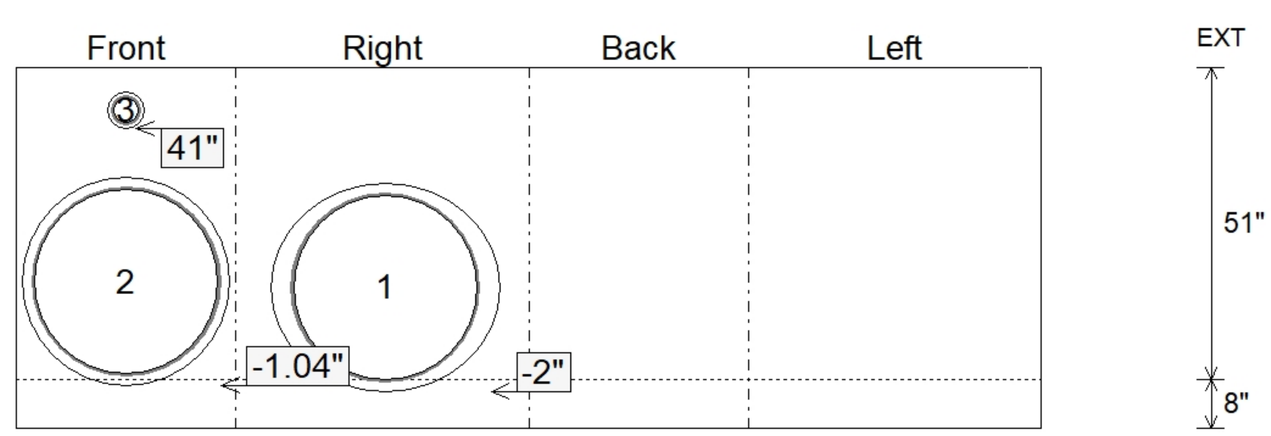

Submittal Drawing
7/28/2026 3:11:02 PM

SUBMITTAL
APPROVED BY: