Job Name: 26-1635 - KYTC Oldham Co (261505) Job Location: Peewee Valley, KY Contractor: Cleary Construction, Inc.	Plant: 100 7/24/2026 2:10:38 PM	Tech: Jared - F PC: T. Ryan	

Structure ID: 16417-54 CBIA-15

P2 BX036036-08TS024036 CB TRANSITION SLAB 24"X36" HOLE T/F

P4) 24" x 120" - CB INLET KY A 10' TOP RIGHT F/G - 10"	3398 lb
P3) 24" x 120" - CB INLET KY A 10' BOTTOM RIGHT T/G - 18"	5270 lb
P2) 36" x 36" - CB TRANSITION SLAB 24"X36" HOLE T/F - 8"	1235 lb
P1) 36" x 36" - BOX BASE 8inW, 8inF, Variable Ht F/n - 52"	6550 lb
1) CASTING - HOE KY-206 F/C (KY CBI A)	206 lb
1) 36" x 36" - Conseal CS-102 1.00"	0 lb
1) 24" x 36" - Conseal CS-102 1.00"	0 lb
2) Hole - 34	0 lb
1) Hole - 6	0 lb
1) Hole - 18	0 lb
Structure Total:	16659 lb

Structure Notes: .
** KYTC STATE PROJECT **
1. PER KYTC CBI TYPE A / ASTM C913 SPEC'S.
2. CONCRETE = 4,000 PI AT 28 DAYS.
3. CASTING BY ICAST (HOE KY-206 F/C (KY CBI A)).
.
REINFORCING PER ASTM A615 (GRADE 60).
- TOP PHASE (As .62) #5 BARS AT 6" C.C.E.W.
- TRANS. SLAB (As .62) #5 BARS AT 6" C.C.E.W (DBL MAT)
- WALLS (As .31) #5 BARS AT 12" C.C.E.W.
- FLOOR (As .31) #5 BARS AT 12" C.C.E.W.

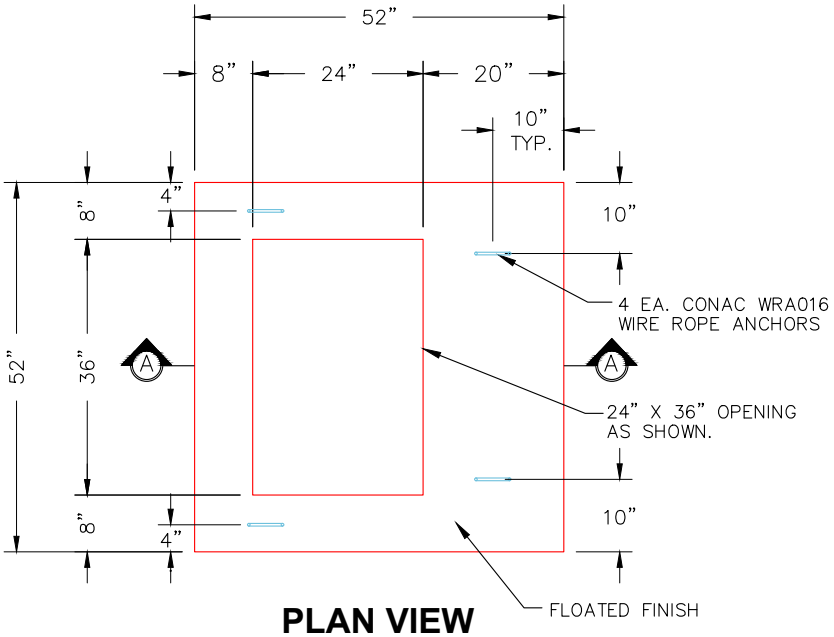

PLAN VIEW

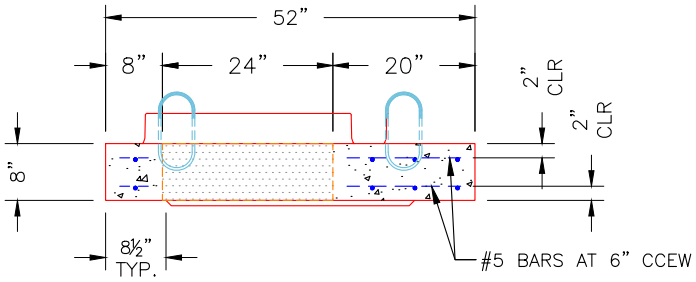

SECTION A-A

NOTES:

1. MANUFACTURED TO ASTM C-913 (LATEST REVISION).
2. CONCRETE: 4,000 PSI AT 28 DAYS.
3. REINFORCING: #5 BAR @ 6" O.C. E.W. (DOUBLE MAT) (GRADE 60).

Coating (Int): Coating (Ext):	Seam Up: Tongue Seam Dn: Flat	Wall Thickness: 8"	Height (Ext): 8"	Weight (Net): 1235 lb Volume (Net): 0.32cu.yd