Job Name: 26-1635 - KYTC Oldham Co (261505) Job Location: Peewee Valley, KY Contractor: Cleary Construction, Inc.	Plant: 100 7/24/2026 2:03:49 PM	Tech: Jared - F PC: T. Ryan	

Structure ID: 14877-21 CBIA-6

P1 BX2436-08BVF **BOX BASE 8inW, 8inF, Variable Ht T/n**

P3) 24" x 120" - CB INLET KY A 10' TOP RIGHT F/G - 10"	3398 lb
P2) 24" x 120" - CB INLET KY A 10' BOTTOM RIGHT T/G - 18"	5270 lb
P1) 24" x 36" - BOX BASE 8inW, 8inF, Variable Ht T/n - 35"	4466 lb
1) CASTING - HOE KY-206 F/C (KY CBI A)	206 lb
1) 24" x 36" - Conseal CS-102 1.00"	0 lb
1) Hole - 22	0 lb
1) Hole - 6	0 lb
1) Hole - 18	0 lb
Structure Total:	13340 lb

Structure Notes: .
** KYTC STATE PROJECT **
1. PER KYTC CBI TYPE A / ASTM C913 SPEC'S.
2. CONCRETE = 4,000 PI AT 28 DAYS.
3. CASTING BY ICAST (HOE KY-206 F/C (KY CBI A)).
.
REINFORCING PER ASTM A615 (GRADE 60).
- TOP PHASE (As .62) #5 BARS AT 6" C.C.E.W.
- WALLS (As .31) #5 BARS AT 12" C.C.E.W.
- FLOOR (As .31) #5 BARS AT 12" C.C.E.W.

Rim: 787.4' Rim to Invert: 5.58' Slack: 3.96" Sump: 0" Step Position:

Position	Elev	Angle	Ext. (cw)	Pipe	Pipe OD	Connector	Hole	Horz Size	Up (_)	Offset
Invert 1	781.82'	55°	20.5"	18" CMP	19"	Hole 22	22"	26.857"	-2"	7"
Invert 2	783.99'	180°	20"	4" HDPE (perf pipe)	4.8"	Hole 6	6"	6"	25"	0"
Invert 3	781.9'	270°	26"	15" CMP	16"	Hole 18	18"	18"	-0.5"	0"
Invert 4										
Invert 5										
Invert 6										
Invert 7										
Invert 8										

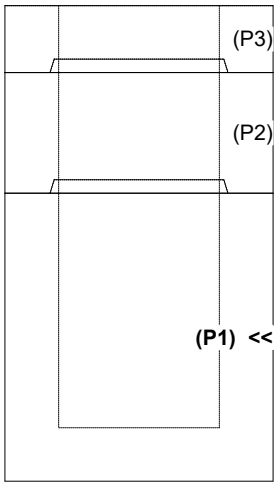

RIGHT-SIDE UP VIEW (int. dimensions)

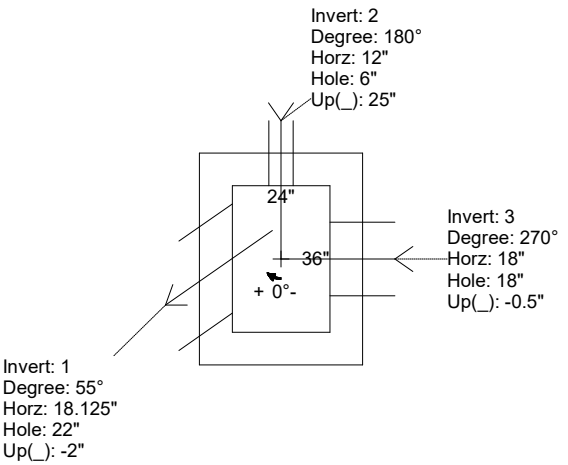

UPSIDE-DOWN VIEW (int. dimenions)

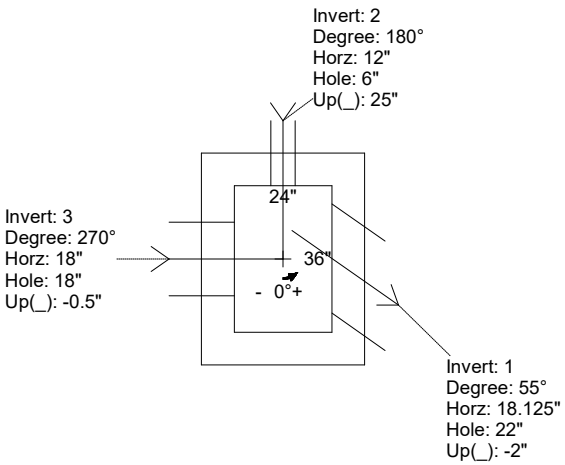

INSIDE WALL DIMENSIONS

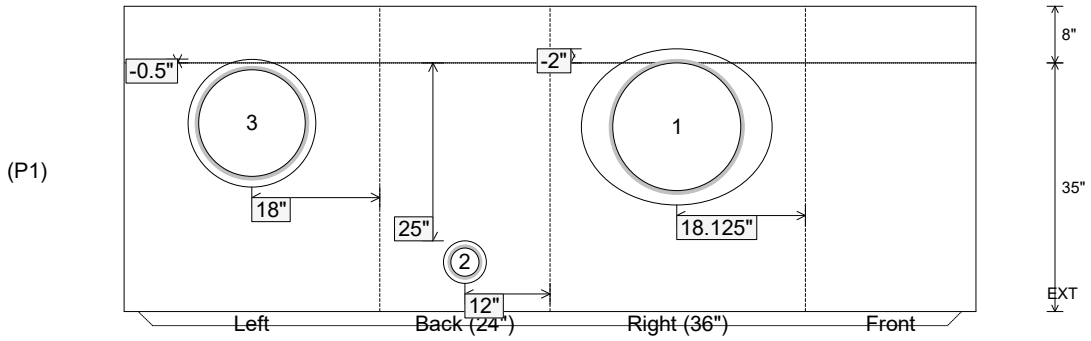

Coating (Int): Coating (Ext):	Seam Up: Tongue Seam Dn: n/a	Wall Thickness: 8" Floor Height: 8"	Height (Int): 35" Height (Ext): 43"	Weight (Net): 4466 lb Volume (Net): 1.14cu.yd