Job Name: 26-1577 - Elkhorn Elementary Redesign Job Location: Frankfort, KY 40601 Contractor: Louisville Paving and Construction	Plant: 100 5/5/2026 1:41:06 PM	Tech: Jared - A PC: J. Jarvis	

Structure ID: MH4-6 SS-MH

P3 GR4CDARED **GRADE RING w/ConBlock-CDA Red F/F**

P4) 24" - CASTING HEIGHT - 7"	0 lb
P3) 24" - GRADE RING w/ConBlock-CDA Red F/F - 4"	270 lb
P2) 48" - ECC CONE w/ 24" HOLE, w/ConBlock-CDA Red F/G - 24"	1738 lb
P1) 48" - MH BASE w/ConBlock-CDA Red T/n - 24"	2911 lb
1) 48" - MH INVERT CHANNEL - FULL HEIGHT	1440 lb
1) JOINT WRAP - 12" WD x 048" MAC WRAP	0 lb
1) ADMIXTURE CONBLOCK CDA RED	0 lb
1) CASTING - HOE MC-350 F/C FSD	305 lb
1) 48" - Conseal CS-102 1.00" (Double)	0 lb
2) PSX - 12-08 NYLO	16 lb
Structure Total:	6680 lb

Structure Notes:

1. PER ASTM C-478 SPECIFICATIONS
2. CONCRETE: 4,000 PSI AT 28 DAYS
3. REINFORCEMENT: (1) #3 HOOP CENTERED (GRADE 60)

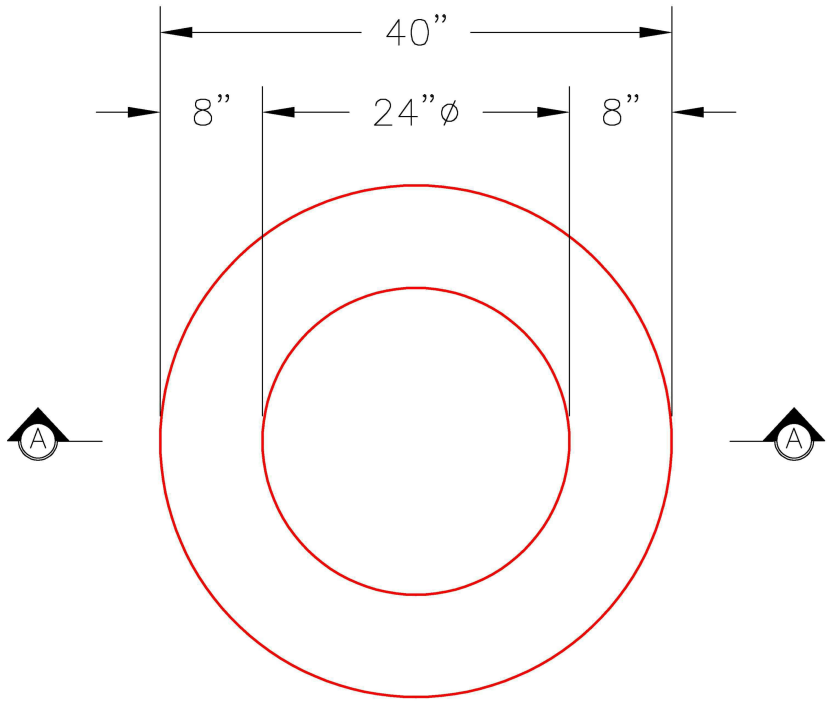

PLAN VIEW

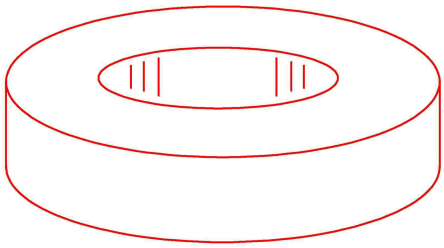

ISOMETRIC VIEW

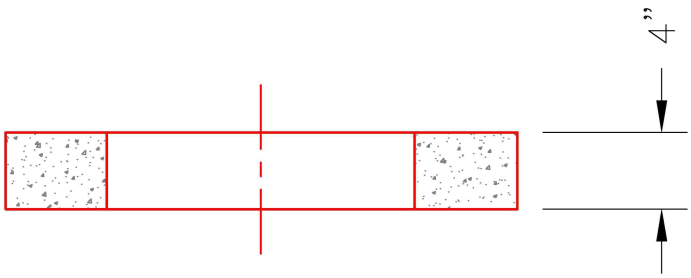

SECTION A-A

Coating (Int): Coating (Ext):	Seam Up: Flat Seam Dn: Flat	Wall Thickness: 8"	Height (Ext): 4"	Weight (Net): 270 lb Volume (Net): 0.07cu.yd