Job Name: 26-1549 Cowan St. Trunk Sewer
Job Location: Nashville, TN
Contractor: Garney Companies, Inc.

PC: Jay Ross Jarvis
TECH: Jared - A
Plant: 100

Structure ID: **MH-5-6 SS-MH**

Spec: Sanitary	Rim: 417.26'	Sump: 2.5"	Floor (Bot): 382.592'
Type: SAN.MH w/Xypex	Invert: 383.8'	Floor (Top): 383.592'	Overall Height: 34.667'
Size: 84"	Rim to Invert: 33.46'	Floor Height: 12"	Slack: 0.02"

Structure Notes: .
PLAN LABEL: MH-5
1. JBS 1312 WT F/C SANITARY PROVIDED BY ICAST.
2. PER ASTM C478 SPECIFICATIONS.
3. CONCRETE = 4,000 PSI AT 28 DAYS.
4. ADMIXTURE = XYPEX C-1000 RED.
5. REINFORCING PER ASTM A615 (GRADE 60).
- TOP SLAB (As .62) #5 BARS AT 6" C.C.E.W.
- RISER/WALLS (As .24)
- FLOOR (As .47) #5 BARS AT 8" C.C.E.W.
6. DOUBLE BANDS FOR BOOTS
7. ANY REQUIRED INTERIOR COATINGS TO BE SUPPLIED & APPLIED BY OTHERS.
8. **NO STEPS**

STRUCTURE SUMMARY:

P6) 30" - CASTING HEIGHT - 6"	0 lb
P5) 84" - MH FLAT TOP w/2X 30" Holes ECC w/XYPEX - 17"	6992 lb
P4) 84" - MH RISER w/XYPEX - 96"	18626 lb
P3) 84" - MH RISER w/XYPEX - 96"	18143 lb
P2) 84" - MH RISER w/XYPEX - 96"	18626 lb
P1) 84" - MH BASE w/FLANGE (12F/14EF) w/XYPEX - 93"	27004 lb
1) JOINT WRAP - 0.065"x6"x50' CONSEAL CS212	0 lb
1) JOINT WRAP PRIMER - CONSEAL CS-75 (1 gal.)	0 lb
1) ADMIXTURE XYPEX C-1000 RED	0 lb
1) SECONDARY POUR - EXT. FLANGE	0 lb
2) CASTING - JBS 1312 WT F/C SANITARY	600 lb
4) 84" - Conseal CS-102 1.00" (Double)	0 lb
2) A-Lok - 1840	2 lb
1) Kor-N-Seal2 - S206-30 (DBL Bands)	6 lb
Structure Total:	89999 lb

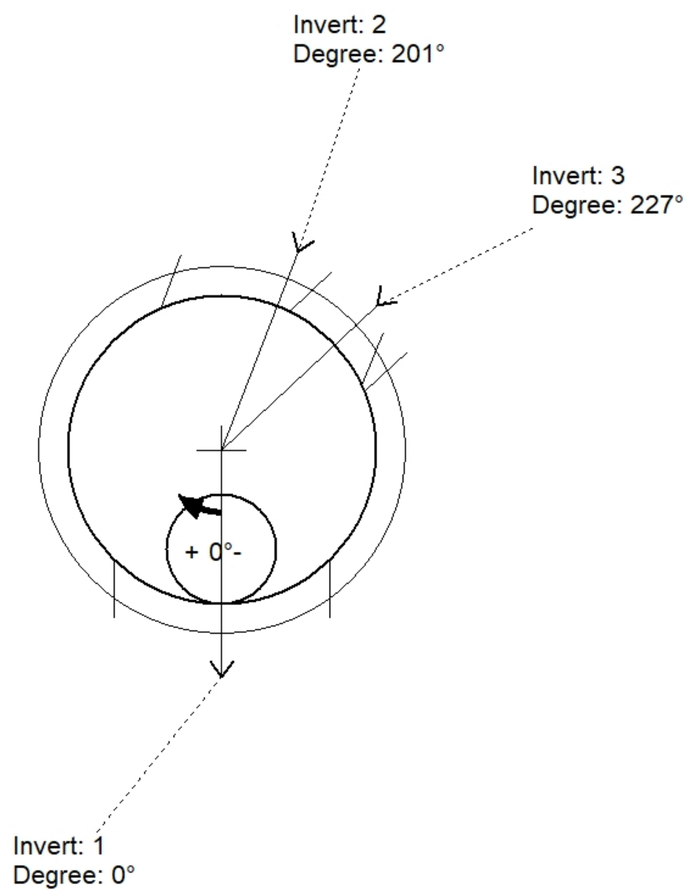

Position	Elev	Angle	Pipe	Pipe OD	Hole	Connector	Up (_)	Ref
Rim	417.26'							
Reducer								
Invert 1	383.8'	0°	54" DI	57.5"	59"	A-Lok 1840	0"	P1
Invert 2	383.9'	201°	54" DI	57.5"	59"	A-Lok 1840	1.2"	P1
Invert 3	402.1'	227°	24" DI	25.75"	30"	Kor-N-Seal2 S206-30 (DBL Bands)	25.1"	P3
Invert 4								
Invert 5								
Invert 6								
Invert 7								
Invert 8								

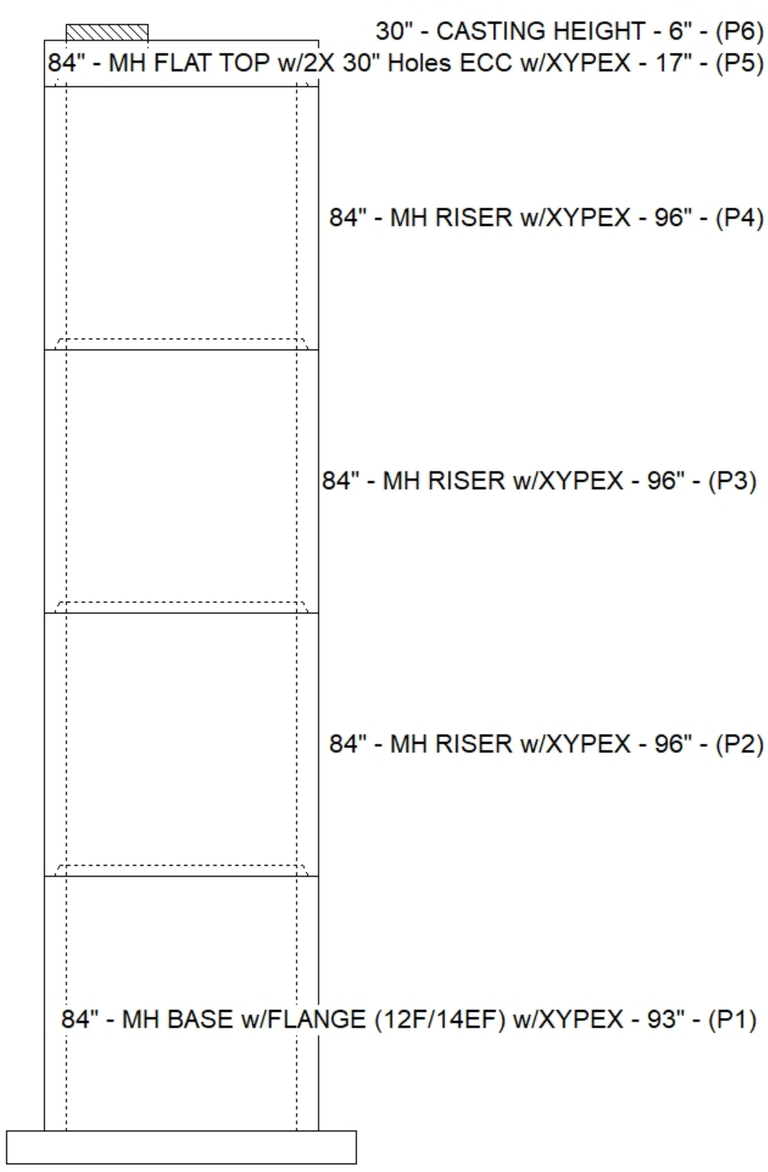

Default - Interior Dimensions

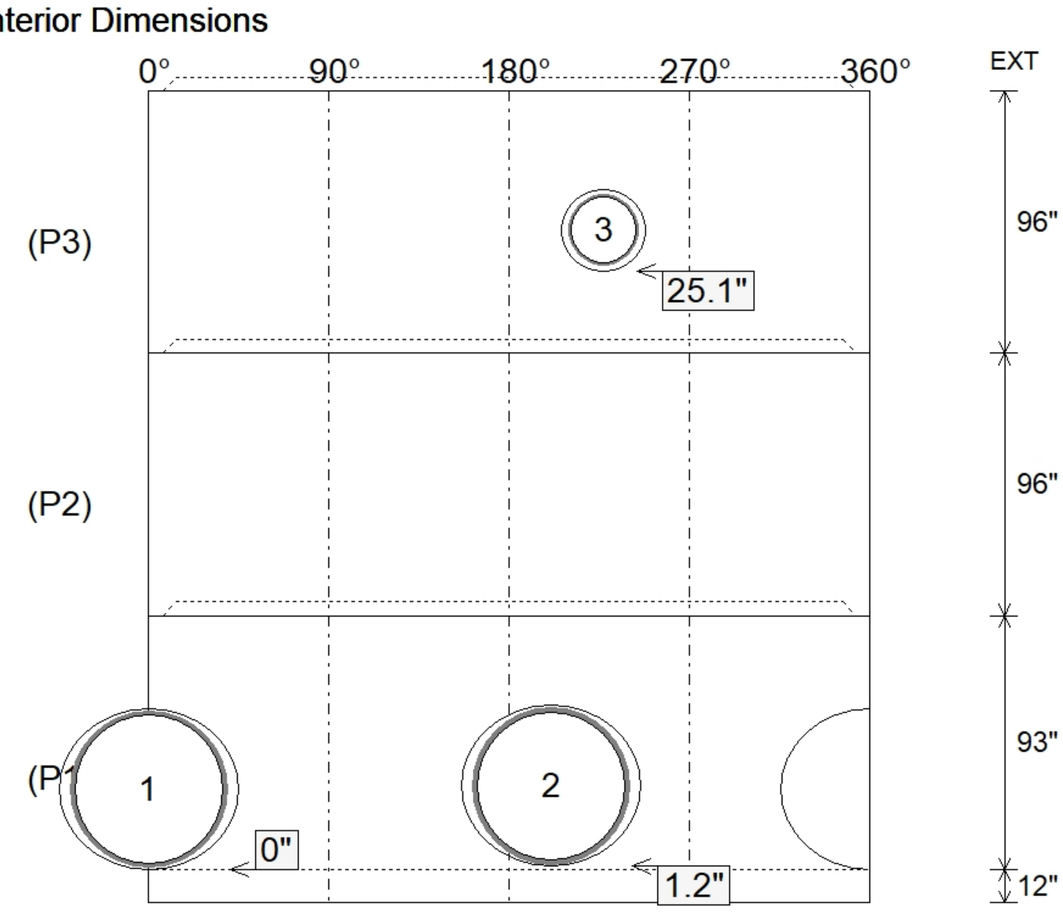

Submittal Drawing
8/5/2026 2:57:24 PM

SUBMITTAL
APPROVED BY: