Job Name: 26-1549 Cowan St. Trunk Sewer Job Location: Nashville, TN Contractor: Garney Companies, Inc.	Plant: 100 8/5/2026 9:31:49 AM	Tech: Jared - A PC: Jay Ross Jarvis	

Structure ID: MH-3-4 SS-MH

P5 MH084LD17SPX **MH FLAT TOP w/2X 30" Holes ECC w/XYPEX**

P6) 30" - CASTING HEIGHT - 6"	0 lb
P5) 84" - MH FLAT TOP w/2X 30" Holes ECC w/XYPEX - 17"	6992 lb
P4) 84" - MH RISER w/XYPEX - 84"	16298 lb
P3) 84" - MH RISER w/XYPEX - 96"	18626 lb
P2) 84" - MH RISER w/XYPEX - 96"	18626 lb
P1) 84" - MH BASE w/FLANGE (12F/14EF) w/XYPEX - 93"	27004 lb
1) JOINT WRAP - 0.065"x6"x50' CONSEAL CS212	0 lb
1) JOINT WRAP PRIMER - CONSEAL CS-75 (1 gal.)	0 lb
1) ADMIXTURE XYPEX C-1000 RED	0 lb
1) SECONDARY POUR - EXT. FLANGE	0 lb
2) CASTING - JBS 1312 F/C SANITARY	600 lb
4) 84" - Conseal CS-102 1.00" (Double)	0 lb
2) A-Lok - 1840	2 lb
Structure Total:	88148 lb

Structure Notes: .
PLAN LABEL: MH-3
1. JBS 1312 F/C SANITARY PROVIDED BY ICAST.
2. PER ASTM C478 SPECIFICATIONS.
3. CONCRETE = 4,000 PSI AT 28 DAYS.
4. ADMIXTURE = XYPEX C-1000 RED.
5. REINFORCING PER ASTM A615 (GRADE 60).
- TOP SLAB AS SHOWN BELOW.
- RISER/WALLS (As .24)
- FLOOR (As .47) #5 BARS AT 8" C.C.E.W.
6. ANY REQUIRED INTERIOR COATINGS TO BE SUPPLIED & APPLIED BY OTHERS.
7. **NO STEPS**

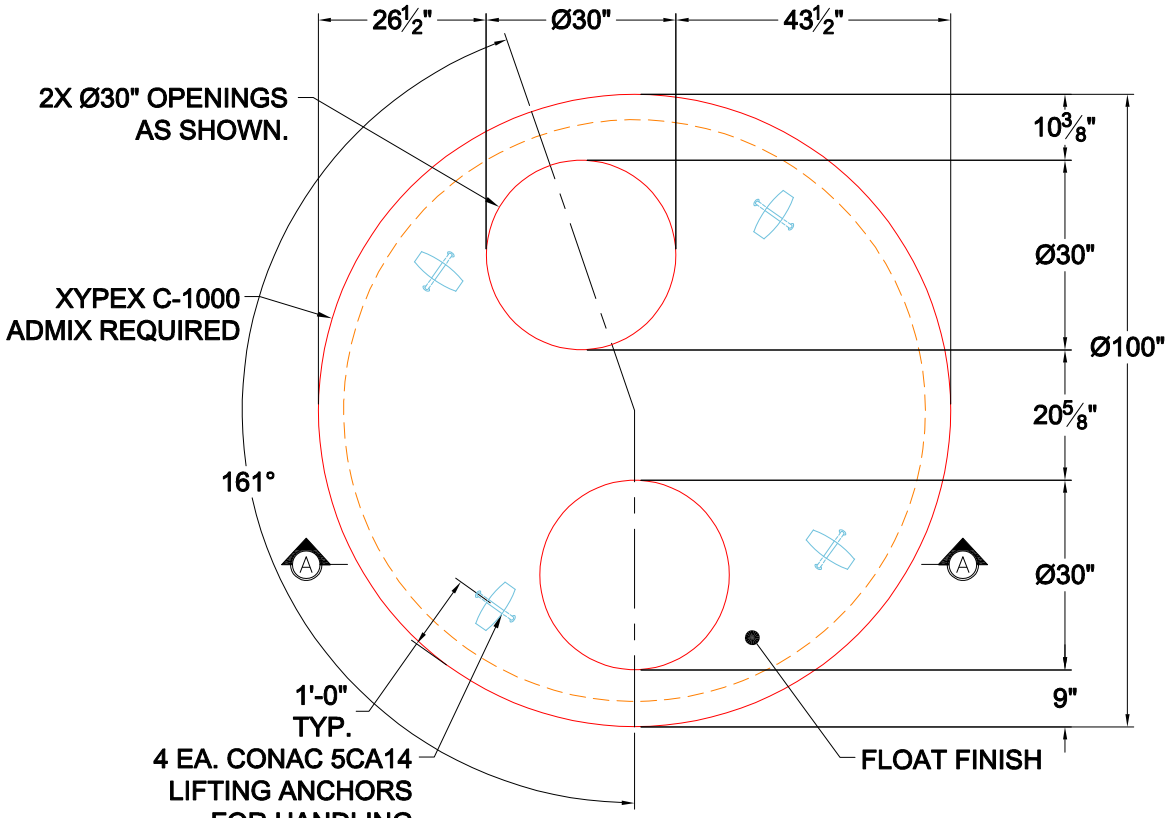

PLAN VIEW

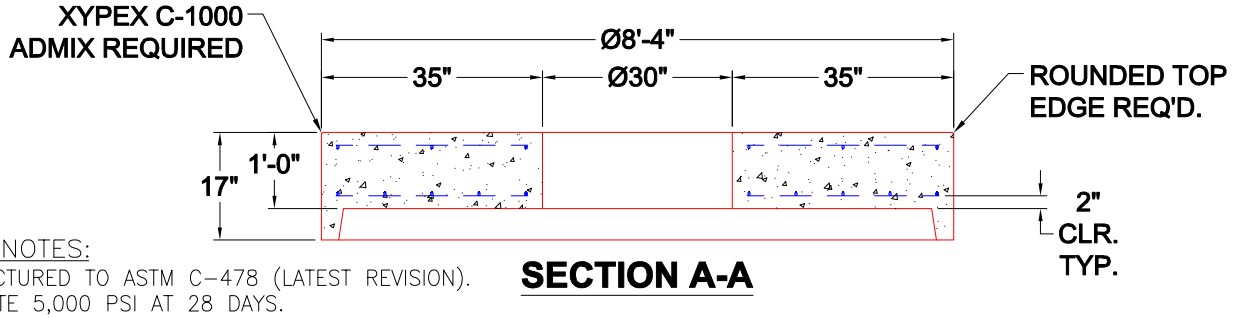

SECTION A-A

GENERAL NOTES:
1. MANUFACTURED TO ASTM C-478 (LATEST REVISION).
2. CONCRETE 5,000 PSI AT 28 DAYS.
3. XYPEX C-1000 ADMIX REQUIRED.
4. REINFORCING: TOP MAT #4 @ 18" O.C. E.W.
BOTTOM MAT #4 @ 9" O.C. E.W.
(GRADE 60)

Coating (Int): Coating (Ext):	Seam Up: Flat Seam Dn: Groove	Wall Thickness: 8"	Height (Ext): 17"	Weight (Net): 6992 lb Volume (Net): 1.79cu.yd