Job Name: 26-1549 Cowan St. Trunk Sewer Job Location: Nashville, TN Contractor: Garney Companies, Inc.	Plant: 100 8/5/2026 9:31:51 AM	Tech: Jared - A PC: Jay Ross Jarvis	

Structure ID: MH B4

P6 MH060LD13XS XYPEX MH FLAT TOP w/24" CC Hole

P7) 24" - CASTING HEIGHT - 7"	0 lb
P6) 60" - XYPEX MH FLAT TOP w/24" CC Hole - 13"	2701 lb
P5) 60" - MH RISER w/XYPEX SPECIAL - 36"	3758 lb
P4) 60" - MH RISER w/XYPEX SPECIAL - 72"	7516 lb
P3) 60" - MH RISER w/XYPEX SPECIAL - 72"	7516 lb
P2) 60" - MH RISER w/XYPEX SPECIAL - 72"	7516 lb
P1) 60" - MH BASE EF (08F/07EF) XYPEX - 70"	10274 lb
1) JOINT WRAP - 0.065"x6"x50' CONSEAL CS212	0 lb
1) JOINT WRAP PRIMER - CONSEAL CS-75 (1 gal.)	0 lb
1) ADMIXTURE XYPEX C-1000 RED	0 lb
1) 60" - MH INVERT CHANNEL w/XYPEX - FULL HEIGHT	2962 lb
1) SECONDARY POUR - EXT. FLANGE	0 lb
1) CASTING - JBS 1150 F/C SANITARY	250 lb
5) 60" - Conseal CS-102 1.00" (Double)	0 lb
1) 24" - Conseal CS-102 1.00" (Double)	0 lb
2) A-Lok - 1040	2 lb
Structure Total:	42496 lb

Structure Notes: .
1. JBS 1150 F/C SANITARY PROVIDED BY ICAST.
2. PER ASTM C478 SPECIFICATIONS.
3. CONCRETE = 4,000 PSI AT 28 DAYS.
4. ADMIXTURE = XYPEX C-1000 RED.
5. REINFORCING PER ASTM A615 (GRADE 60).
- TOP SLAB (As .62) #5 BARS AT 6" C.C.E.W.
- RISER/WALLS (As .18)
- FLOOR (As .31) #5 BARS AT 12" C.C.E.W.
6. DOUBLE BANDS FOR BOOTS
7. ANY REQUIRED INTERIOR EPOXY COATING TO BE SUPPLIED & INSTALLED BY OTHERS
8. **NO STEPS**

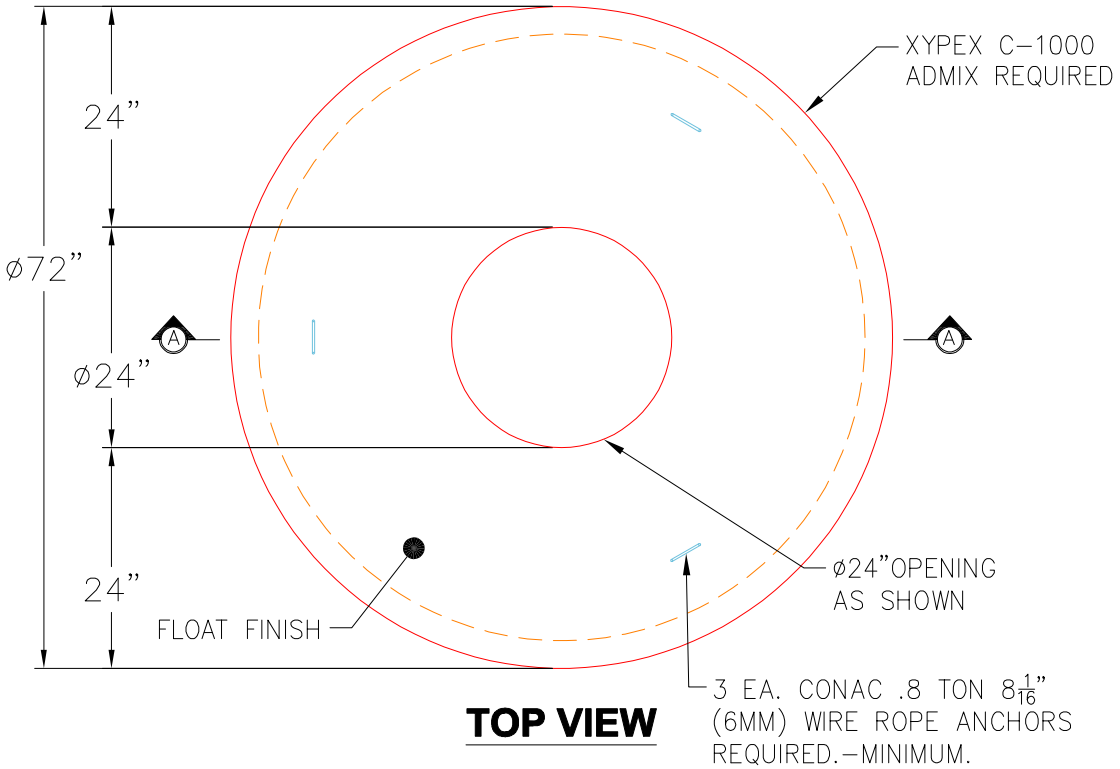

TOP VIEW

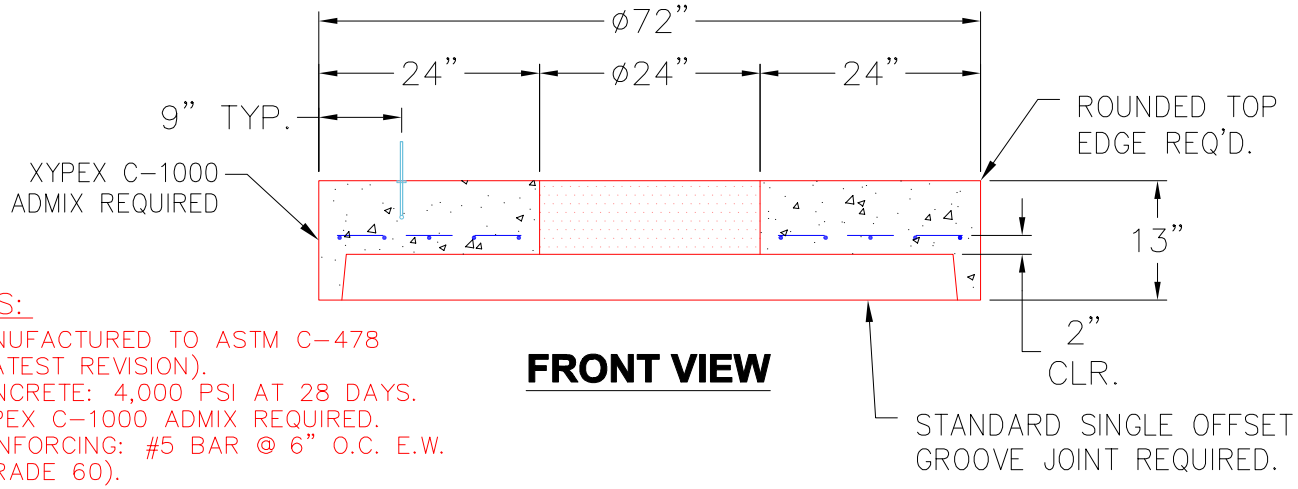

FRONT VIEW

NOTES:
1. MANUFACTURED TO ASTM C-478 (LATEST REVISION).
2. CONCRETE: 4,000 PSI AT 28 DAYS.
3. XYPEX C-1000 ADMIX REQUIRED.
4. REINFORCING: #5 BAR @ 6" O.C. E.W. (GRADE 60).

Coating (Int): Coating (Ext):	Seam Up: Flat Seam Dn: Groove	Wall Thickness: 6"	Height (Ext): 13"	Weight (Net): 2701 lb Volume (Net): 0.69cu.yd