Job Name: 26-1545 - KYTC Boone Co. Camp Ernst Roundabout (ID 3002312)
Job Location: Burlington, KY
Contractor: Lawrence Construction & Leasing, Inc.

RC: J. Jarvis
TECH: J.Horsley
Plant: 100

RIM = TOP OF CURB
10" ABOVE FLOW LINE

Structure ID: **D4-4 CBIB**
Spec: KYTC
Type: CBI TYPE B (10')
Size: 24" x 24"

Rim: 888.62'
Invert: 883.6'
Rim to Invert: 5.02'

Sump: 0"
Floor (Top): 883.6'
Floor Height: 8"

Floor (Bot): 882.933'
Overall Height: 5.667'
Slack: 0.24"

Structure Notes: .
** KYTC STATE PROJECT **
1. PER KYTC CBI TYPE B / ASTM C913 SPEC'S.
2. CONCRETE = 4,000 PSI AT 28 DAYS.
3. CASTING BY ICAST (HOE KY-345 SET/CBI B)
.
REINFORCING PER ASTM A615 (GRADE 60).
- TOP PHASE (As .62) #5 BARS AT 6" C.C.E.W.
- WALLS (As .31) #5 BARS AT 12" C.C.E.W.
- FLOOR (As .31) #5 BARS AT 12" C.C.E.W.

STRUCTURE SUMMARY:

P3) 8" x 120" - CB INLET KY B 10' TOP F/G - 9"	1660 lb
P2) 24" x 120" - CB INLET KY B 10' BOTTOM LEFT T/G - 17"	2650 lb
P1) 24" x 24" - BOX BASE 8inW, 8inF, Variable Ht T/n - 34"	3555 lb
1) CASTING - HOE KY-345 SET (CBI B)	290 lb
1) 24" x 24" - Conseal CS-102 1.00"	0 lb
2) Hole - 20	0 lb
1) Hole - 6	0 lb
Structure Total:	8155 lb

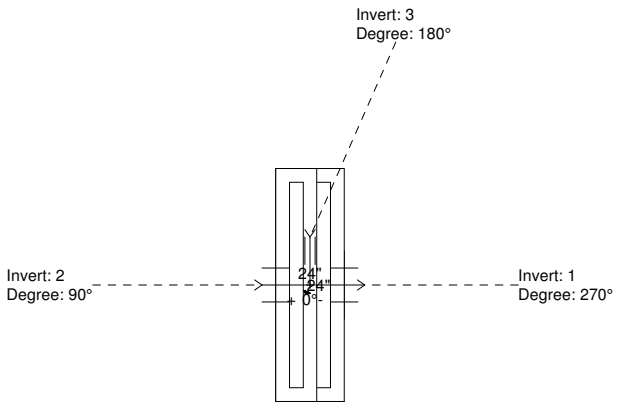

Position	Elev	Angle	Pipe	Pipe OD	Hole	Connector	Up (_)	Ref
Rim	888.62'							
Reducer								
Invert 1	883.6'	270°	15" HDPE	17.6"	20"	Hole 20	-2.5"	P1
Invert 2	883.6'	90°	15" HDPE	17.6"	20"	Hole 20	-2.5"	P1
Invert 3	885.58'	180°	4" HDPE (perf pipe)	4.8"	6"	Hole 6	22.75"	P1
Invert 4								
Invert 5								
Invert 6								
Invert 7								
Invert 8								

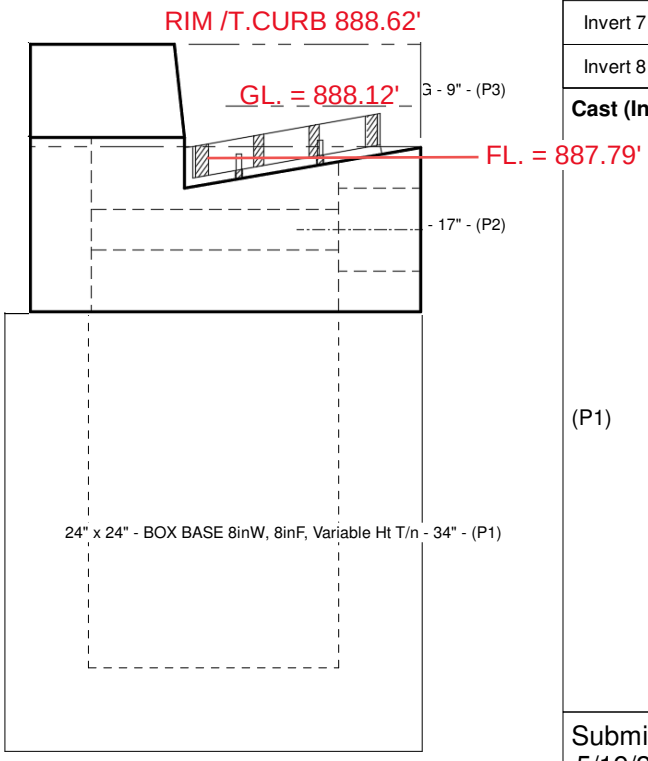

Cast (Int. Dim.) - Interior Dimensions

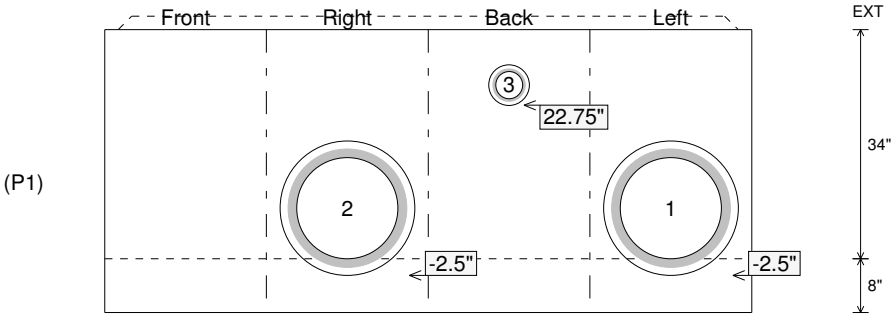

Submittal Drawing
5/19/2026 9:20:53 PM

SUBMITTAL
APPROVED BY: