Job Name: 26-1510 West Railroad Ave Job Location: Elizabethtown, KY Contractor: Schroeder Construction, Inc.	Plant: 100 5/5/2026 7:45:16 AM	Tech: Jared - A PC: Celina Goff	

Structure ID: 11 (1)

P1 CSWBF **Custom Sidewalk Bridge Footer F/n**

P1) 72" x 36" - Custom Sidewalk Bridge Footer F/n - 12"
1) SECONDARY POUR

	4060 lb
	0 lb
Structure Total:	4060 lb

FIRST POUR (FOOTER): 2,610 LBS
SECOND POUR (VERTICAL WALL): 1,450 LBS

Structure Notes:
1. PER ASTM C-913 SPECIFICATIONS
2. CONCRETE: 5,000 PSI AT 28 DAYS
3. REINFORCEMENT - 2" MIN. REBAR CLEARANCE (TYP):
   - SHORT BARS: #4 BAR @ 12" C.C. E.W. (GRADE 60)
   - LONG BARS: #5 BAR @ 12" C.C. E.W. (GRADE 60)
   - ALL BARS TO BE EPOXY COATED
4. WET STICK DOUBLE MAT OF 12" X 30" #4 L-BARS SPACED @ 12" C.C. E.W. (GRADE 60) FOR VERTICAL WALL POUR TIE-IN (SEE L-BAR DETAIL) - L-BARS TO BE EPOXY COATED
5. LIFTERS: 4 EA. 5CA14 CONAC A-ANCHORS FOR PLANT & FIELD HANDLING - INSTALLED AS SHOWN

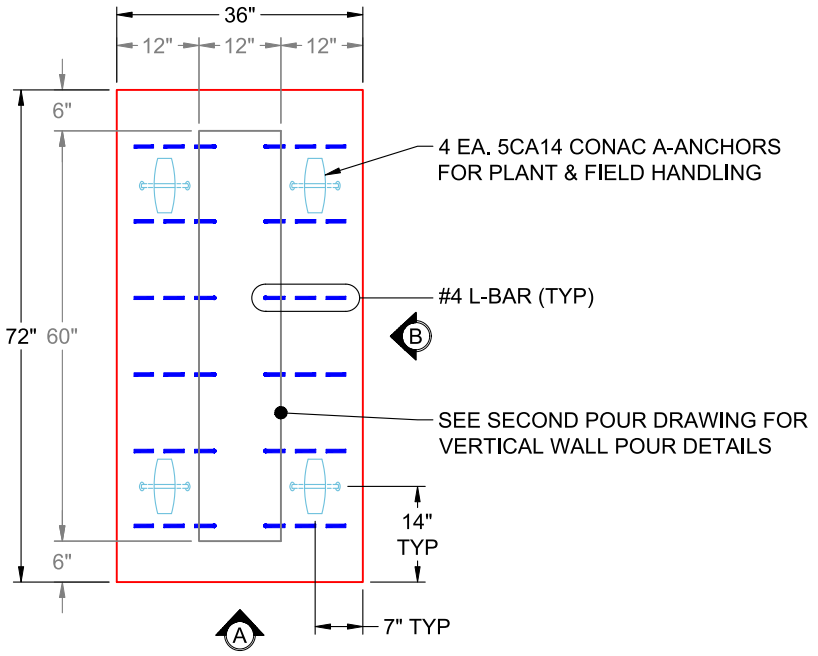

PLAN VIEW
(RIGHT SIDE UP)

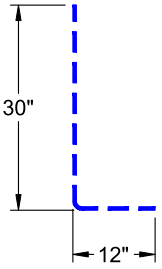

#4 L-BAR
12 EA. REQUIRED

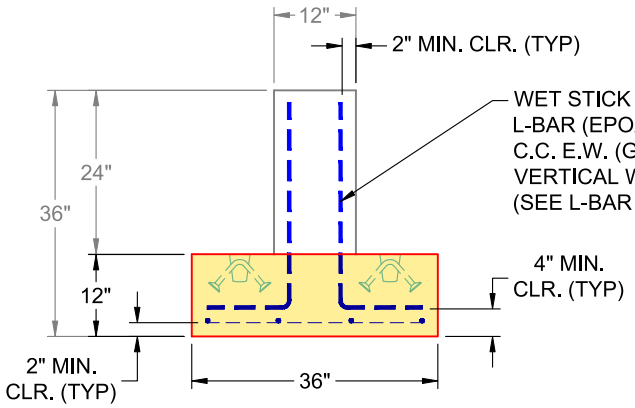

VIEW A
(RIGHT SIDE UP)

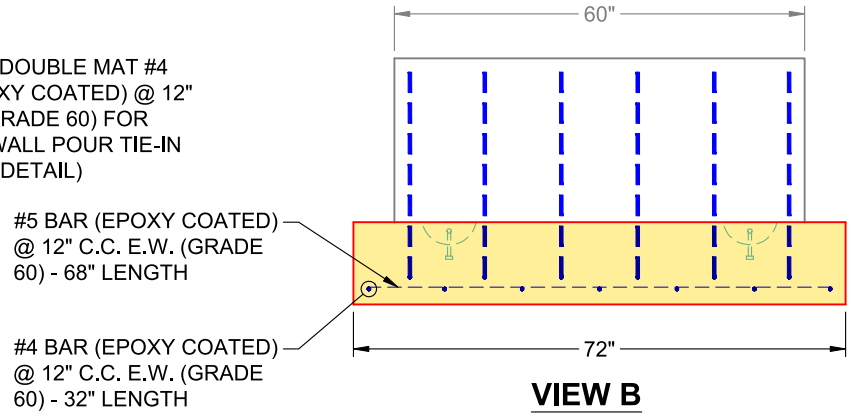

VIEW B
(RIGHT SIDE UP)

Coating (Int): Coating (Ext):	Seam Up: Flat Seam Dn: n/a	Wall Thickness: 0" Floor Height: 12"	Height (Int): 0" Height (Ext): 0"	Weight (Net): 4060 lb Volume (Net): 1.04cu.yd

Job Name: 26-1510 West Railroad Ave Job Location: Elizabethtown, KY Contractor: Schroeder Construction, Inc.	Plant: 100 5/5/2026 7:45:16 AM	Tech: Jared - A PC: Celina Goff	

Structure ID: 11 (1)

P1 CSWBF **Custom Sidewalk Bridge Footer F/n**

P1) 72" x 36" - Custom Sidewalk Bridge Footer F/n - 12"
1) SECONDARY POUR

	4060 lb
	0 lb
Structure Total:	4060 lb

FIRST POUR (FOOTER): 2,610 LBS

SECOND POUR (VERTICAL WALL): 1,450 LBS

Structure Notes:
1. PER ASTM C-913 SPECIFICATIONS
2. CONCRETE: 5,000 PSI AT 28 DAYS
3. REINFORCEMENT - 2" MIN. REBAR CLEARANCE (TYP):
   - VERTICAL BARS: DOUBLE MAT #4 L-BAR @ 12" C.C. E.W. (GRADE 60) - WET STICK DURING FLOOR POUR
   - HORIZONTAL BARS: DOUBLE MAT #5 BAR @ 12" C.C. E.W. (GRADE 60)
   - ALL BARS TO BE EPOXY COATED
5. LIFTERS INSTALLED DURING FLOOR POUR

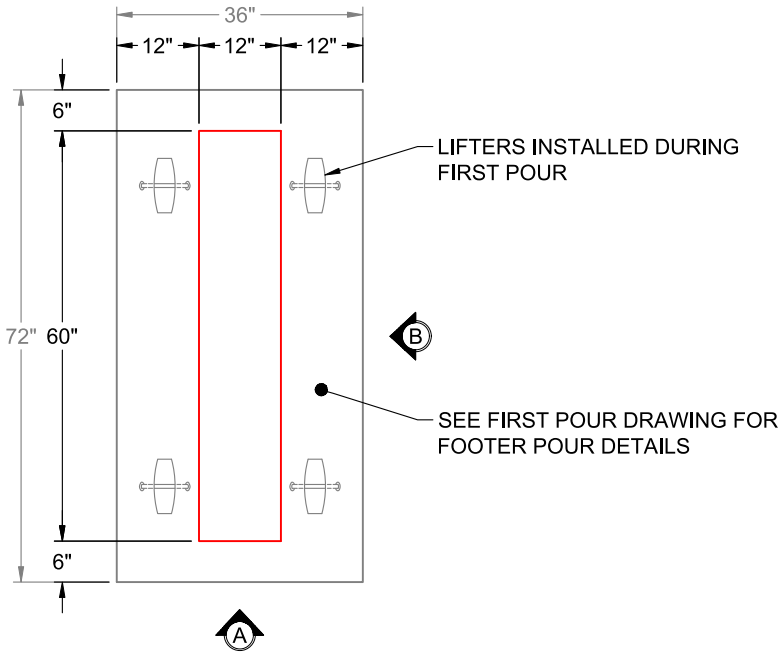

PLAN VIEW
(RIGHT SIDE UP)

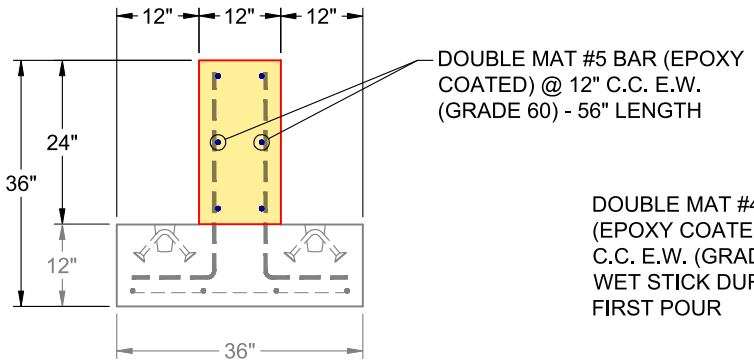

VIEW A
(RIGHT SIDE UP)

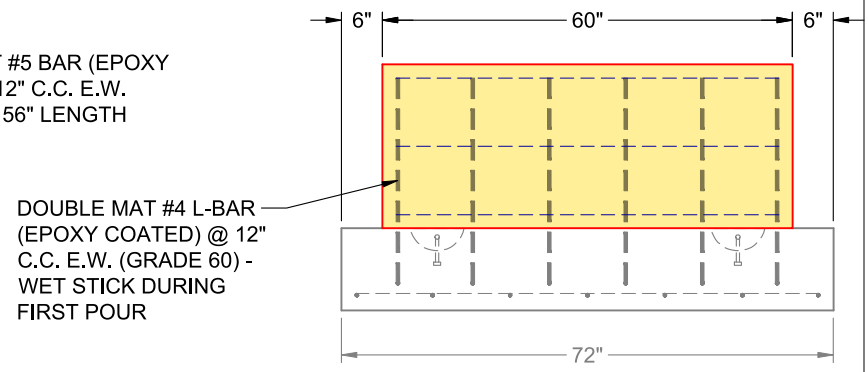

VIEW B
(RIGHT SIDE UP)

Coating (Int): Coating (Ext):	Seam Up: Flat Seam Dn: n/a	Wall Thickness: 0" Floor Height: 12"	Height (Int): 0" Height (Ext): 0"	Weight (Net): 4060 lb Volume (Net): 1.04cu.yd