Job Name: 26-1466 - Lower Mill Creek HWDW Protection Job Location: Cincinnati, OH Contractor: Sunesis Construction	Plant: 100 7/22/2026 12:41:38 PM	Tech: Jared - F PC: E. Bradley	

Structure ID: 220-8 SS-MH

P5 MH120LD18S **MH FLAT TOP w/48"x48" Hatch F/G**

P6) 48" x 48" - HATCH (CAST FLUSH) - 3"	100 lb
P5) 120" - MH FLAT TOP w/48"x48" Hatch F/G - 18"	14814 lb
P4) 120" - MH RISER Custom Ht T/G - 34"	12916 lb
P3) 120" - MH RISER T/G - 96"	36468 lb
P2) 120" - MH RISER T/G - 96"	32259 lb
P1) 120" - MH BASE EF Cust. Ht. 24"F (14"EF =170"OD) T/n - 62"	65517 lb
1) JOINT WRAP - 0.065"x6"x50' CONSEAL CS212	0 lb
1) JOINT WRAP PRIMER - CONSEAL CS-75 (1 gal.)	0 lb
1) 48" - MH INVERT CHANNEL - FULL HEIGHT	1440 lb
4) 120" - Hamilton Kent MH Gasket	0 lb
1) Hole - 62	0 lb
1) Hole - 76	0 lb
1) Kor-N-Seal2 - S206-28	6 lb
20) MH Step ML-10-TDS-NCR - 10"	0 lb
Structure Total:	163520 lb

Structure Notes: .
1. PER CINCINNATI MSD / ASTM C478 SPECIFICATIONS.
2. CONCRETE = 4,000 PSI AT 28 DAYS.
3. HATCH SUPPLIED BY OTHERS.
4. HATCH TO BE CAST INTO THE TOP SLAB.
5. BAFFLE WALL, WEIR PLATE, & INVERT CHANNEL PROVIDED BY OTHERS.

.
REINFORCING PER ASTM A615 (GRADE 60).
- TOP SLAB = H20 LOADING
- RISER/WALLS (As .36)
- FLOOR #6 BARS AT 6" O.C.E.W. DBL. MAT

NOTES:
1. PER ASTM C-478 LATEST REVISION
2. CONCRETE: 4,000 PSI AT 28 DAYS.
3. REINFORCEMENT:
   TOP SLAB TOP LAYER = #5 BAR @ 16" C.C.E.W.
   TOP SLAB BTM LAYER = #5 BAR @ 6" C.C.E.W.
   PER ASTM A615 (GRADE 60)
4. JOINT SEALANT – HAMILTON KENT MH GASKET.
5. HATCH: 48"X48" HATCH SUPPLIED BY OTHERS & CAST IN TOP SLAB BY ICAST
6. HATCH TO BE CAST INTO TOP SLAB

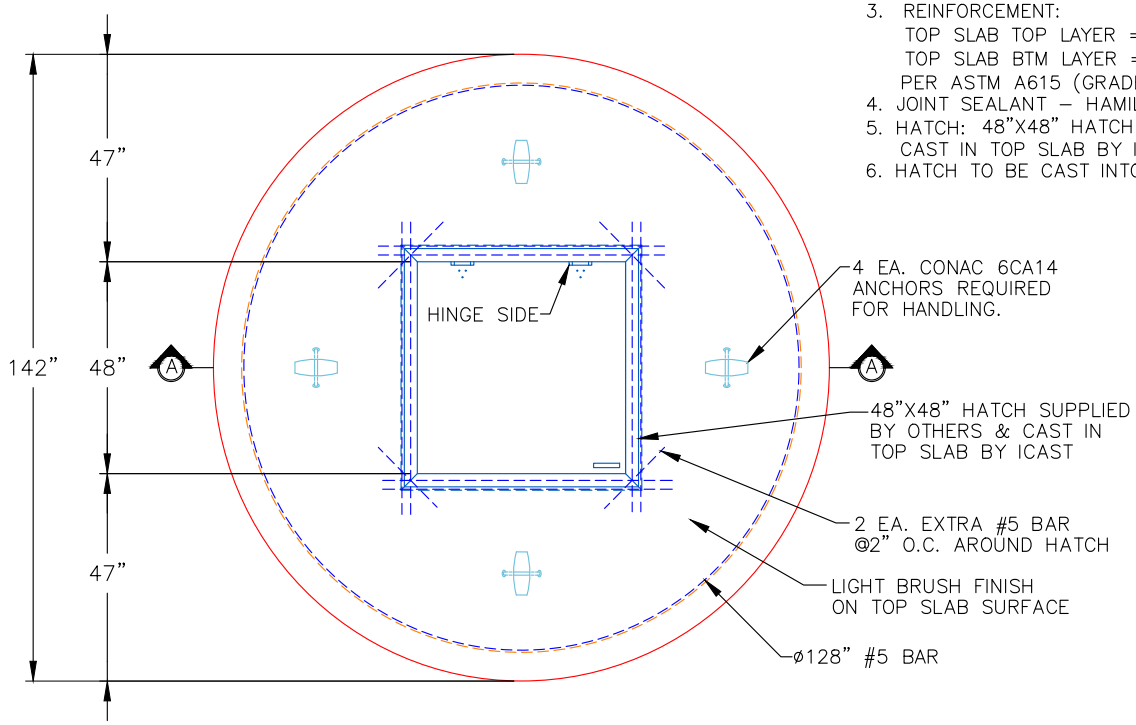

PLAN VIEW

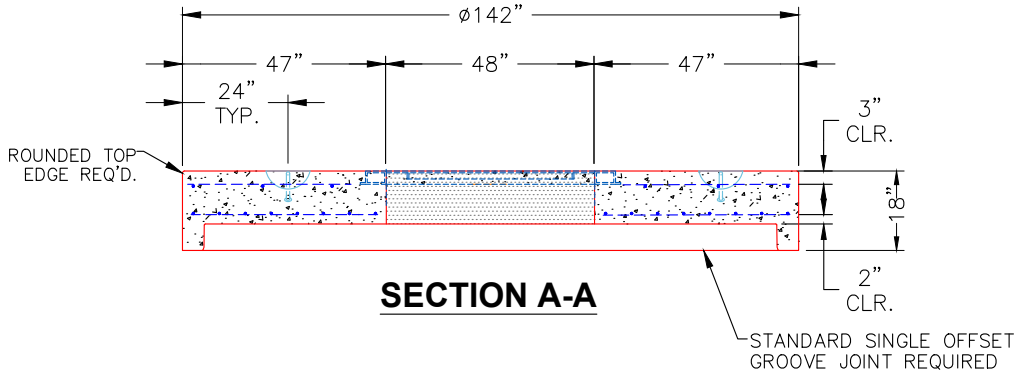

SECTION A-A

Coating (Int): Coating (Ext):	Seam Up: Flat Seam Dn: Groove	Wall Thickness: 11"	Height (Ext): 18"	Weight (Net): 14814 lb Volume (Net): 3.78cu.yd