| | | | |
|---|---|---|---|
| Job Name: 26-1322 - KYTC Warren Co (261503)<br>Job Location: Bowling Green, KY<br>Contractor: Mick-Murf Construction Inc. | Plant: 100<br>9/7/2026 11:29:34 AM | Tech: Jared - F<br>PC: C. Goff | |

## Structure ID: 13-22 CBIA

## P1 BX3636-08BAVF BOX BASE 8inW, 8inF, Variable Ht F/n

| | |
|---|---|
| P4) 24" x 120" - CB INLET KY A 10' TOP RIGHT F/G - 10" | 3398 lb |
| P3) 24" x 120" - CB INLET KY A 10' BOTTOM RIGHT T/G - 18" | 5270 lb |
| P2) 36" x 36" - CB TRANSITION SLAB 24"X36" HOLE T/F - 8" | 1235 lb |
| P1) 36" x 36" - BOX BASE 8inW, 8inF, Variable Ht F/n - 38" | 5159 lb |
| 1) CASTING - HOE KY-206 F/C (KY CBI A) | 206 lb |
| 1) 36" x 36" - Conseal CS-102 1.00" | 0 lb |
| 1) 24" x 36" - Conseal CS-102 1.00" | 0 lb |
| 2) Hole - 28 | 0 lb |
| 1) Hole - 22 | 0 lb |
| Structure Total: | 15268 lb |

Structure Notes:
** KYTC STATE PROJECT **
1. PER KYTC CBI TYPE A / ASTM C913 SPEC'S.
2. CONCRETE = 4,000 PSI AT 28 DAYS.
3. CASTING BY ICAST (HOE KY -206 F/C (KY CBI A))

REINFORCING PER ASTM A615 (GRADE 60).
- TOP PHASE (As .62) #5 BARS AT 6" C.C.E.W.
- TRANS. SLAB (As .62) #5 BARS AT 6" C.C.E.W (DBL MAT)
- WALLS (As .31) #5 BARS AT 12" C.C.E.W.
- FLOOR (As .31) #5 BARS AT 12" C.C.E.W.

Rim: 533.53' Rim to Invert: 6.46' Slack: 3.52" Sump: 0" Step Position:

| Position | Elev | Angle | Ext. (cw) | Pipe | Pipe OD | Connector | Hole | Horz Size | Up (_) | Offset |
|---|---|---|---|---|---|---|---|---|---|---|
| Invert 1 | 527.07' | 120° | 30.625" | 24" CMP | 25" | Hole 28 | 28" | 32.332" | -2" | -9" |
| Invert 2 | 527.15' | 270° | 26" | 24" CMP | 25" | Hole 28 | 28" | 28" | -1" | 0" |
| Invert 3 | 527.15' | 0° | 26" | 18" CMP | 19" | Hole 22 | 22" | 22" | -1" | 0" |
| Invert 4 | | | | | | | | | | |
| Invert 5 | | | | | | | | | | |
| Invert 6 | | | | | | | | | | |
| Invert 7 | | | | | | | | | | |
| Invert 8 | | | | | | | | | | |

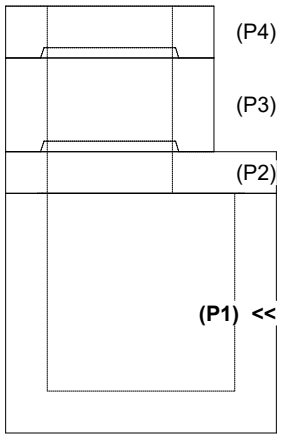


RIGHT-SIDE UP VIEW (int. dimensions)

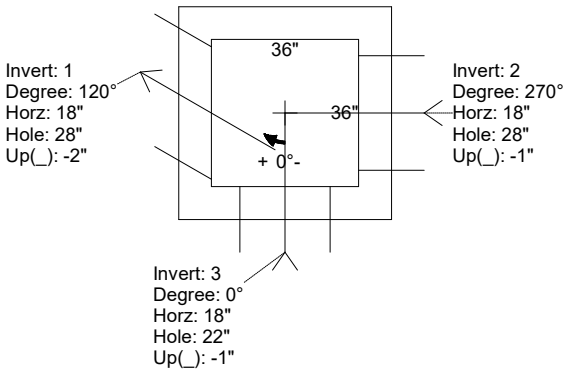


UPSIDE-DOWN VIEW (int. dimenions)

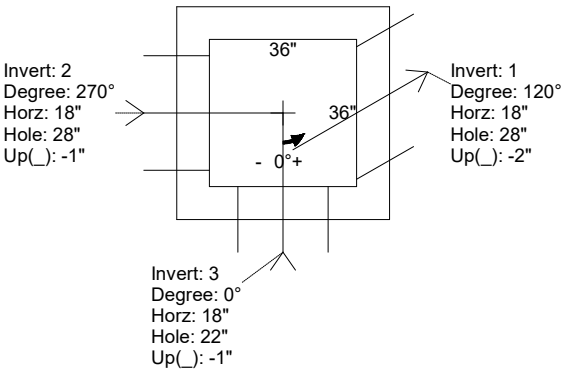


INSIDE WALL DIMENSIONS

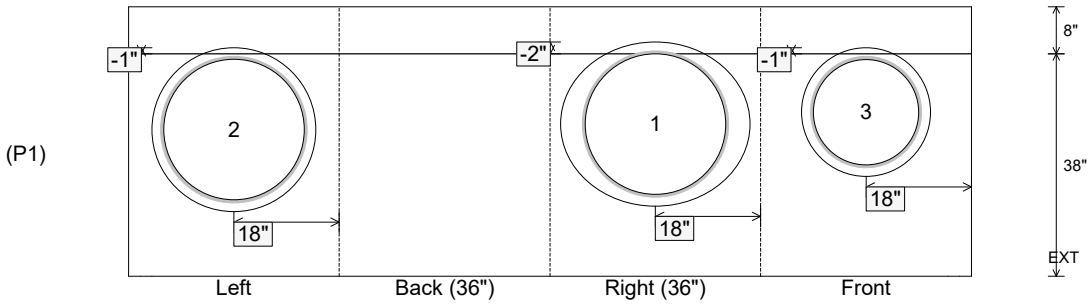


| | | | | |
|---|---|---|---|---|
| Coating (Int):<br>Coating (Ext): | Seam Up: Flat<br>Seam Dn: n/a | Wall Thickness: 8"<br>Floor Height: 8" | Height (Int): 38"<br>Height (Ext): 46" | Weight (Net): 5159 lb<br>Volume (Net): 1.32cu.yd |