Job Name: 26-1260 - Meade Co 2023 Water Improvements Job Location: Brandenburg, KY Contractor: Endesol, Inc.	Plant: 100 9/15/2026 5:09:25 PM	Tech: Jared - F PC: E. Bradley	

Structure ID: 2 - 2

P2 BX060060-08LD08S **BX FLAT TOP 8"W w/36"X48" Hatch F/F**

P3) 36" x 48" - HATCH (CAST FLUSH) - 3.5"	100 lb
P2) 60" x 60" - BX FLAT TOP 8"W w/36"X48" Hatch F/F - 8"	2717 lb
P1) 60" x 60" - BOX BASE 8inW, 12inF, Variable Ht F/n - 60"	16620 lb
1) HATCH (Alum.) - HALLIDAY W1S 36"x48"	97 lb
1) JOINT WRAP - 0.065"x6"x50' CONSEAL CS212	0 lb
1) JOINT WRAP PRIMER - CONSEAL CS-75 (1 gal.)	0 lb
1) 60" x 60" - Conseal CS-102 1.00" (Double)	0 lb
1) 36" x 48" - Conseal CS-102 1.00" (Double)	0 lb
2) PSX - 12M DD	16 lb
Structure Total:	19550 lb

Structure Notes: .
1. PER ASTM C913 SPECIFICATIONS.
2. CONCRETE = 4,000 PSI AT 28 DAYS.
3. LIB AL. LADDER W/EXT. POST BY ICAST
4. CASTING BY ICAST (HALLIDAY H1W 36"x48")
.
REINFORCING PER ASTM A615 (GRADE 60).
- TOP SLAB (As .62) #5 BARS AT 6" C.C.E.W.
- WALLS (As .31) #5 BARS AT 12" C.C.E.W.
- FLOOR (As .31) #5 BARS AT 12" C.C.E.W. (DOUBLE MAT)

NOTES:

1. MANUFACTURED PER ASTM C913 (LATEST REVISION).
2. CONCRETE = 4,000 PSI AT 28 DAYS.
3. REINFORCING: #5 BARS @ 6" E.W. O.C. (GRADE 60) – 2" MIN. REBAR CLEARANCE (TYP).
4. HATCH: H1W 36"X48" HALLIDAY HATCH TO BE SUPPLIED & CAST IN TOP SLAB BY ICAST.
5. HATCH TO BE CAST INTO TOP OF LID.

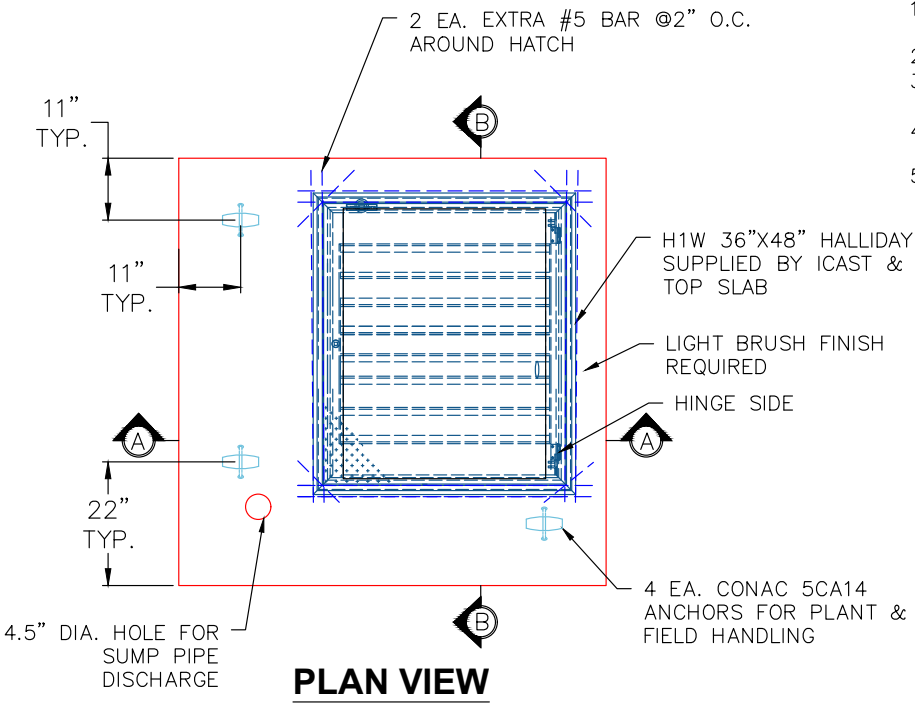

PLAN VIEW

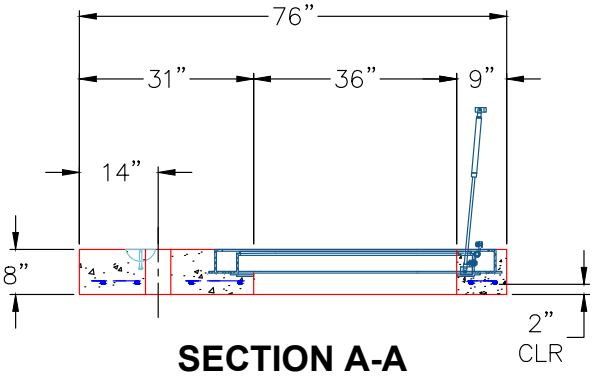

SECTION A-A
(RIGHT–SIDE–UP VIEW)

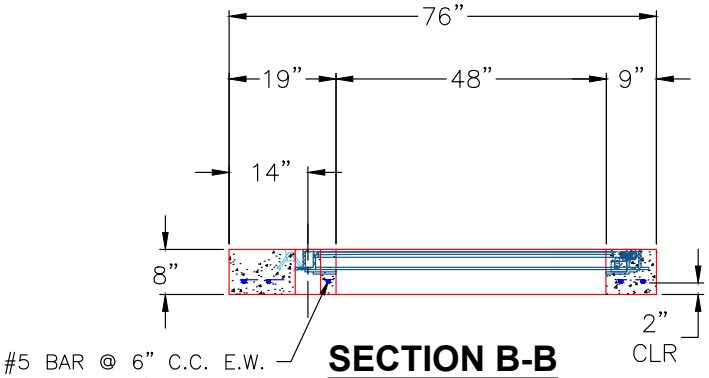

SECTION B-B
(RIGHT–SIDE–UP VIEW)

Coating (Int): Coating (Ext):	Seam Up: Flat Seam Dn: Flat	Wall Thickness: 8"	Height (Ext): 8"	Weight (Net): 2717 lb Volume (Net): 0.69cu.yd