Job Name: 26-1260 - Meade Co 2023 Water Improvements Job Location: Brandenburg, KY Contractor: Endesol, Inc.	Plant: 100 9/15/2026 5:09:09 PM	Tech: Jared - F PC: E. Bradley	

Structure ID: 2 - 1

P1 BX6060-08W12F-BAVF **BOX BASE 8inW, 12inF, Variable Ht F/n**

P3) 36" x 48" - HATCH (CAST FLUSH) - 3.5"	100 lb
P2) 60" x 60" - BX FLAT TOP 8"W w/36"X48" Hatch F/F - 8"	2717 lb
P1) 60" x 60" - BOX BASE 8inW, 12inF, Variable Ht F/n - 60"	16620 lb
1) HATCH (Alum.) - HALLIDAY W1S 36"x48"	97 lb
1) JOINT WRAP - 0.065"x6"x50' CONSEAL CS212	0 lb
1) JOINT WRAP PRIMER - CONSEAL CS-75 (1 gal.)	0 lb
1) 60" x 60" - Conseal CS-102 1.00" (Double)	0 lb
1) 36" x 48" - Conseal CS-102 1.00" (Double)	0 lb
2) PSX - 12M DD	16 lb
Structure Total:	19550 lb

Structure Notes: .
1. PER ASTM C913 SPECIFICATIONS.
2. CONCRETE = 4,000 PSI AT 28 DAYS.
3. LIB AL. LADDER W/EXT. POST BY ICAST
4. CASTING BY ICAST (HALLIDAY H1W 36"x48")
.
REINFORCING PER ASTM A615 (GRADE 60).
- TOP SLAB (As .62) #5 BARS AT 6" C.C.E.W.
- WALLS (As .31) #5 BARS AT 12" C.C.E.W.
- FLOOR (As .31) #5 BARS AT 12" C.C.E.W. (DOUBLE MAT)

Rim: 5.667' Rim to Invert: 4.5' Slack: 0" Sump: 14" Step Position:

GENERAL NOTES:
1. MANUFACTURED TO ASTM C-913 (LATEST REVISION).
2. CONCRETE: 4,000 PSI AT 28 DAYS.
3. REINFORCING: #5 BAR @ 12" E.W. O.C. (GRADE 60) – 2" MIN. REBAR CLEARANCE (TYP)
4. WEIGHT:
FIRST POUR – 5,744 LBS.
SECOND POUR – 10,955 LBS.
TOTAL – 16,699 LBS.

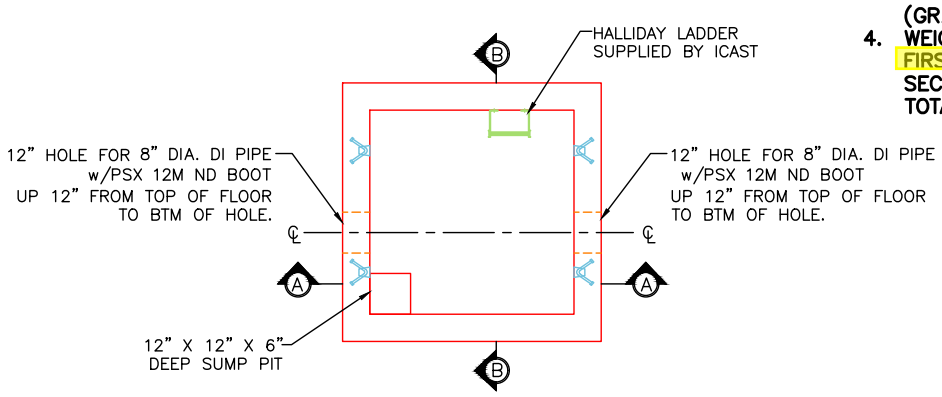

PLAN VIEW
(RIGHT-SIDE-UP VIEW)

FIRST POUR DRAWING

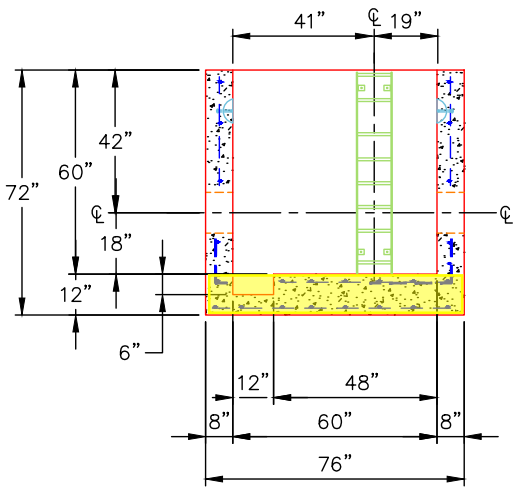

SECTION A-A
(RIGHT-SIDE-UP VIEW)

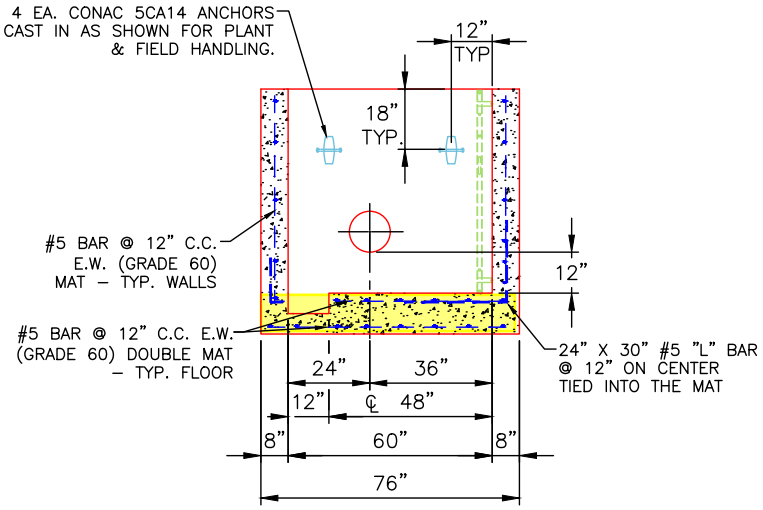

SECTION B-B
(RIGHT-SIDE-UP VIEW)

Coating (Int): Coating (Ext):	Seam Up: Flat Seam Dn: n/a	Wall Thickness: 8" Floor Height: 12"	Height (Int): 60" Height (Ext): 72"	Weight (Net): 16620 lb Volume (Net): 4.24cu.yd

Job Name: 26-1260 - Meade Co 2023 Water Improvements Job Location: Brandenburg, KY Contractor: Endesol, Inc.	Plant: 100 9/15/2026 5:09:09 PM	Tech: Jared - F PC: E. Bradley	

Structure ID: 2 - 1

P1 BX6060-08W12F-BAVF **BOX BASE 8inW, 12inF, Variable Ht F/n**

P3) 36" x 48" - HATCH (CAST FLUSH) - 3.5"	100 lb
P2) 60" x 60" - BX FLAT TOP 8"W w/36"X48" Hatch F/F - 8"	2717 lb
P1) 60" x 60" - BOX BASE 8inW, 12inF, Variable Ht F/n - 60"	16620 lb
1) HATCH (Alum.) - HALLIDAY W1S 36"x48"	97 lb
1) JOINT WRAP - 0.065"x6"x50' CONSEAL CS212	0 lb
1) JOINT WRAP PRIMER - CONSEAL CS-75 (1 gal.)	0 lb
1) 60" x 60" - Conseal CS-102 1.00" (Double)	0 lb
1) 36" x 48" - Conseal CS-102 1.00" (Double)	0 lb
2) PSX - 12M DD	16 lb
Structure Total:	19550 lb

Structure Notes: .
1. PER ASTM C913 SPECIFICATIONS.
2. CONCRETE = 4,000 PSI AT 28 DAYS.
3. LIB AL. LADDER W/EXT. POST BY ICAST
4. CASTING BY ICAST (HALLIDAY H1W 36"x48")

.
REINFORCING PER ASTM A615 (GRADE 60).
- TOP SLAB (As .62) #5 BARS AT 6" C.C.E.W.
- WALLS (As .31) #5 BARS AT 12" C.C.E.W.
- FLOOR (As .31) #5 BARS AT 12" C.C.E.W. (DOUBLE MAT)

Rim: 5.667' Rim to Invert: 4.5' Slack: 0" Sump: 14" Step Position:

GENERAL NOTES:
1. MANUFACTURED TO ASTM C-913 (LATEST REVISION).
2. CONCRETE: 4,000 PSI AT 28 DAYS.
3. REINFORCING: #5 BAR @ 12" E.W. O.C. (GRADE 60) – 2" MIN. REBAR CLEARANCE (TYP)
4. WEIGHT:
   FIRST POUR – 5,744 LBS.
   SECOND POUR – 10,955 LBS.
   TOTAL – 16,699 LBS.

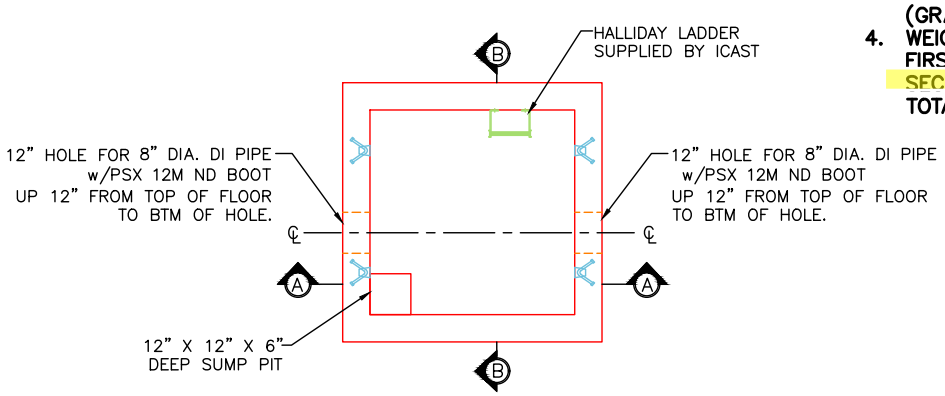

PLAN VIEW
(RIGHT-SIDE-UP VIEW)

SECOND POUR DRAWING

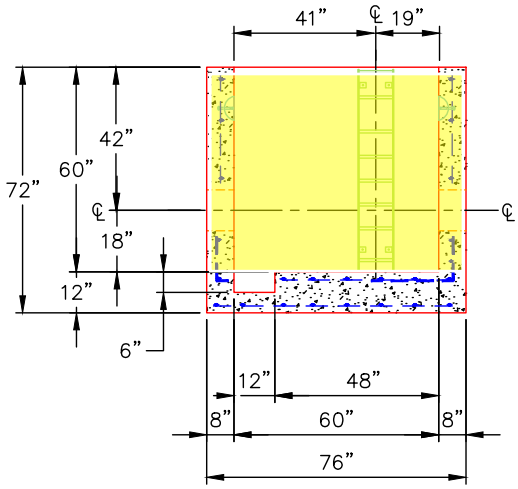

SECTION A-A
(RIGHT-SIDE-UP VIEW)

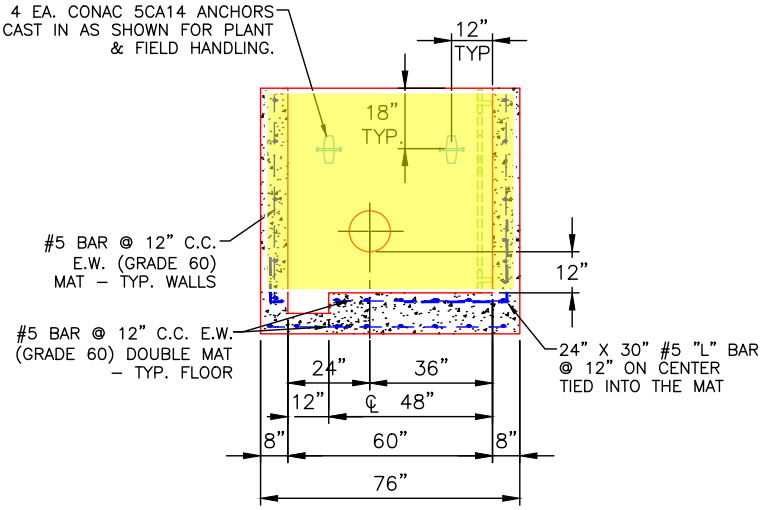

SECTION B-B
(RIGHT-SIDE-UP VIEW)

Coating (Int): Coating (Ext):	Seam Up: Flat Seam Dn: n/a	Wall Thickness: 8" Floor Height: 12"	Height (Int): 60" Height (Ext): 72"	Weight (Net): 16620 lb Volume (Net): 4.24cu.yd