Job Name: 26-1233 - StorPlace Tulip Mini Storage Job Location: Gallatin, TN 37066 Contractor: Hayes Pipe Supply	Plant: Beaver Dam 9/17/2026 2:08:43 PM	Tech: J. Coppage PC: E. Bradley	

Structure ID: MH A2-13 SS-MH

P3 MH048CN30CDARED ECC CONE w/ 24" HOLE, w/ConBlock-CDA Red

P4) 24" - CASTING HEIGHT - 7"	0 lb
P3) 48" - ECC CONE w/ 24" HOLE, w/ConBlock-CDA Red - 30"	1961 lb
P2) 48" - MH RISER w/ConBlock-CDA Red - 36"	2515 lb
P1) 48" - MH BASE w/ConBlock-CDA Red - 24"	2911 lb
1) JOINT WRAP - 0.065"x6"x50' CONSEAL CS212	0 lb
1) JOINT WRAP PRIMER - CONSEAL CS-75 (1 gal.)	0 lb
1) 48" - MH INVERT CHANNEL w/ConBlock-CDA Red - FULL HEIGHT	1440 lb
2) 48" - Conseal CS-102 1.00" (Double)	0 lb
1) 24" - Conseal CS-102 1.00" (Double)	0 lb
2) PSX - 12-08 NYLO	16 lb
8) MH Step ML-10-TDS-NCR - 10"	0 lb

Structure Total:	8843 lb

Structure Notes: .

1. (7" TALL CASTING PROVIDED BY OTHERS)
2. PER ASTM C478 SPECIFICATIONS.
3. CONCRETE = 4,000 PSI AT 28 DAYS.
4. ADMIXTURE = CONBLOCK CDA RED.
5. REINFORCING PER ASTM A615 (GRADE 60).

- CONE (As .12)
- RISER/WALLS (As .12)
- FLOOR (As .31) #5 BARS AT 12" C.C.E.W.

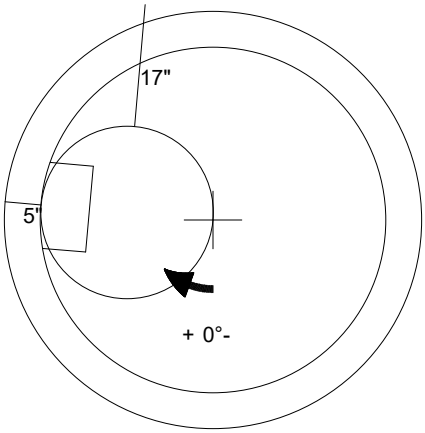

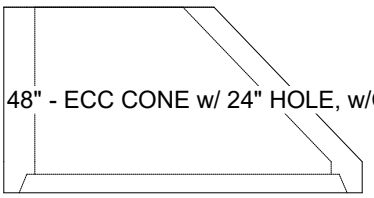

48" - ECC CONE w/ 24" HOLE, w/ConBlock-CDA Red - 30" - (P3)

Coating (Int): Coating (Ext):	Seam Up: Flat Seam Dn: Groove	Wall Thickness: 5"	Height (Ext): 30"	Weight (Net): 1961 lb Volume (Net): 0.5cu.yd