Job Name: 26-1228 - L&N Federal Credit Union
Job Location: Louisville, KY 40243
Contractor: H & W Landworks

PC: T. Lewis
TECH: Jared - A
Plant: 100

Structure ID: **S-7-8 SCI**

Spec: MSD	Rim: 747.1'	Sump: 0"	Floor (Bot): 742.813'
Type: CI SINGLE	Invert: 743.48'	Floor (Top): 743.48'	Overall Height: 4.167'
Size: 24" x 30"	Rim to Invert: 3.62'	Floor Height: 8"	Slack: 1.44"

Structure Notes:
1. PER LOUISVILLE MSD / ASTM C-913 SPECS
2. CONCRETE: 4,000 PSI AT 28 DAYS
3. REINFORCEMENT: #4 BAR @ 12" C.C. E.W. (GRADE 60)
4. NO STORM INVERT
5. NO STEPS
6. HOE 360 FRAME, L-VANE GRATE, & CURB HOOD SUPPLIED BY ICAST

STRUCTURE SUMMARY:

P2) 24" x 30" - CASTING HEIGHT - 6"	0 lb
P1) 24" x 30" - BOX BASE 8inW, 8inF F/n - 36"	4448 lb
1) CASTING - HOE 360 L Vane Set (F/G/H)	362 lb
1) 24" x 30" - Conseal CS-102 1.00"	0 lb
1) Hole - 18	0 lb
Structure Total:	4810 lb

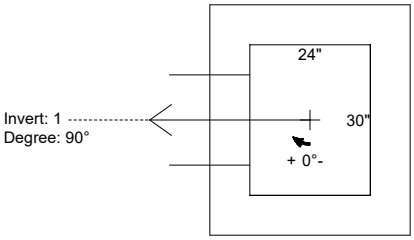

Position	Elev	Angle	Pipe	Pipe OD	Hole	Connector	Up (_)	Ref
Rim	747.1'							
Reducer								
Invert 1	743.48'	90°	12" ADS N-12	14.5"	18"	Hole 18	-1.25"	P1
Invert 2								
Invert 3								
Invert 4								
Invert 5								
Invert 6								
Invert 7								
Invert 8								

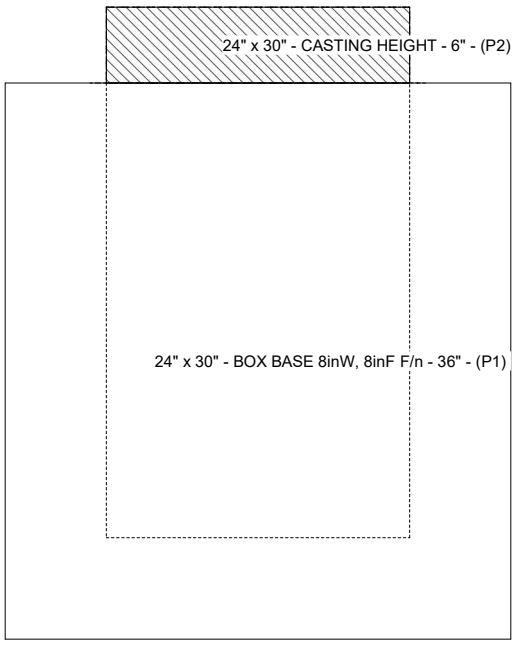

Cast (Int. Dim.) - Interior Dimensions

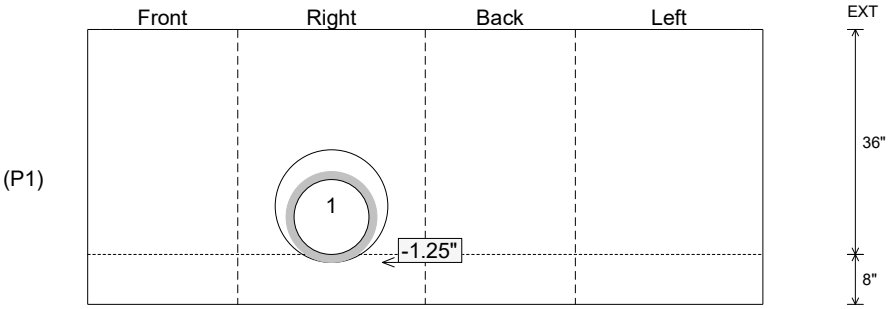

Submittal Drawing
5/6/2026 11:30:18 AM

SUBMITTAL
APPROVED BY: