Job Name: 26-1193 Williamsburg Village Storm Job Location: Danville, KY Contractor: May Excavation & Contracting, LLC	Plant: 100 6/19/2026 9:02:40 AM	Tech: Jared - A PC: Thomas Ryan	

Structure ID: JB1-3 JBB

P2 BXLD2424FL-24 BX FLAT LID 8inW w/CC 24" HOLE

P3) 24" - CASTING HEIGHT - 4"	0 lb
P2) 24" x 24" - BX FLAT LID 8inW w/CC 24" HOLE - 8"	770 lb
P1) 24" x 24" - BOX BASE 8inW, 8inF, Variable Ht - 27"	2965 lb
1) CASTING - HOE KY-206 F/C (KY TY1)	206 lb
1) 24" x 24" - Conseal CS-102 1.00"	0 lb
1) 24" - Conseal CS-102 1.00"	0 lb
2) Hole - 20	0 lb

Structure Total:	3941 lb

Structure Notes: .
1. HOE KY-206 F/C (KY TY1) PROVIDED BY ICAST.
2. KYTC JUNCTION BOX B1 / PER ASTM C913 SPEC'S.
3. CONCRETE = 4,000 PSI AT 28 DAYS.
4. TOP SLAB w KYTC TYPE 1 F/C CAST FLUSH.
5. REINFORCING PER ASTM A615 (GRADE 60).
- TOP SLAB (As. 62) #5 BARS AT 6" C.C.E.W.
- WALLS (As .31) #5 BARS AT 12" C.C.E.W.
- FLOOR (As .31) #5 BARS AT 12: C.C.E.W.

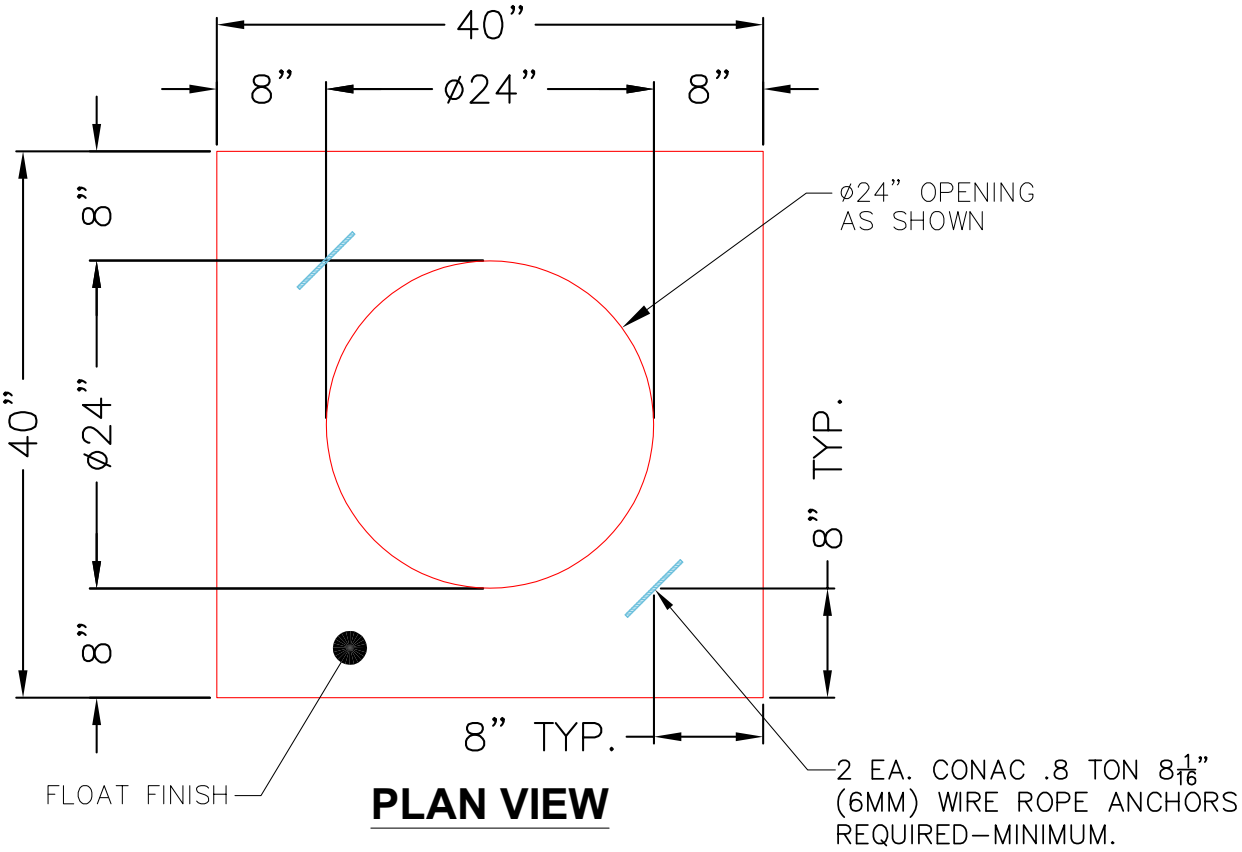

PLAN VIEW

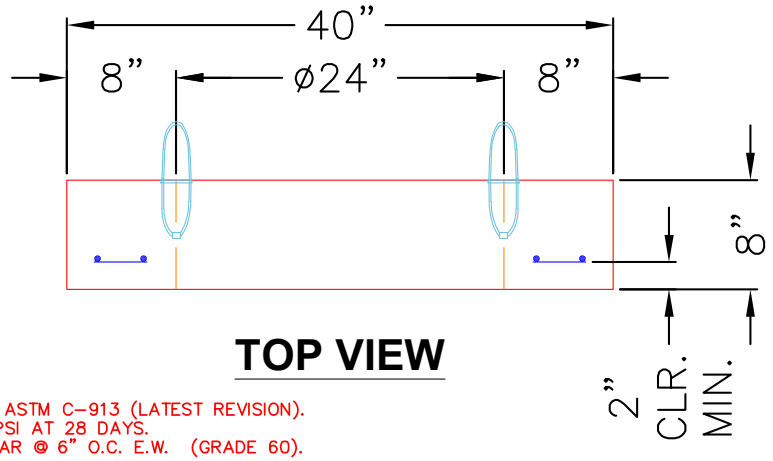

TOP VIEW

NOTES:
1. MANUFACTURED TO ASTM C-913 (LATEST REVISION).
2. CONCRETE: 4,000 PSI AT 28 DAYS.
3. REINFORCING: #5 BAR @ 6” O.C. E.W. (GRADE 60).

Coating (Int): Coating (Ext):	Seam Up: Flat Seam Dn: Flat	Wall Thickness: 8"	Height (Ext): 8"	Weight (Net): 770 lb Volume (Net): 0.2cu.yd