Job Name: 26-1066 - Gunning Pump Station & Force Main Job Location: Bardstown, KY Contractor: Connhurst, LLC	Plant: 100 6/2/2026 10:56:15 AM	Tech: Jared - F PC: E. Bradley	

Structure ID: W W (15)

P5 MH096LD17S **MH FLAT TOP w/36"x72" Hatch F/G**

P6) 36" x 72" - HATCH (CAST FLUSH) - 0"	100 lb
P5) 96" - MH FLAT TOP w/36"x72" Hatch F/G - 17"	8315 lb
P4) 96" - MH RISER T/G - 36"	8968 lb
P3) 96" - MH RISER T/G - 96"	23694 lb
P2) 96" - MH RISER T/G - 84"	20688 lb
P1) 96" - MH BASE EF Cust. Ht. 12"F (14"EF =142"OD) T/n - 79"	35627 lb
1) JOINT WRAP - 12" WD x 096" MAC WRAP	0 lb
1) SPECIAL Internal Coating	0 lb
4) 96" - Conseal CS-231 1.00" (Double)	0 lb
1) 36" x 72" - Conseal CS-231 1.00" (Double)	0 lb
2) Hole - 12	0 lb
1) PSX - 8QRS DD	6 lb
1) PSX - 16M DD	8 lb
1) PSX - 12M DD	8 lb

Structure Total:	97415 lb

Structure Notes: .
1. PER ASTM C478 SPECIFICATIONS.
2. CONCRETE = 4,000 PSI AT 28 DAYS.
3. NO STEPS AND NO INVERT CHANNEL.
4. HATCH SUPPLIED BY OTHERS.
5. INSIDE OF STRUCTURE TO BE SANDBLASTED,THEN A COATING OF TNEMEC 218 TO BE APPLIED, FOLLOWED BY A COATING OF TNEMEC 434, FOLLOWED BY A COATING OF TNEMEC 435.

.
REINFORCING PER ASTM A615 (GRADE 60).
- TOP SLAB (As .31) #5 BARS AT 6" C.C.E.W.
- RISER/WALLS (As .18)
- FLOOR (As .37) #5 BARS AT 10" C.C.E.W. (DOUBLE MAT)

NOTES:
1. PER ASTM C-478 LATEST REVISION
2. CONCRETE: 4,000 PSI AT 28 DAYS.
3. REINFORCEMENT:
   TOP SLAB – #5 BAR @ 6" C.C.E.W.
   PER ASTM A615 (GRADE 60)
4. JOINT SEALANT – 1" CS-231-DOUBLE
5. HATCH: 36"X72" HATCH SUPPLIED BY OTHERS.
6. HATCH TO BE CAST INTO TOP SLAB BY ICAST

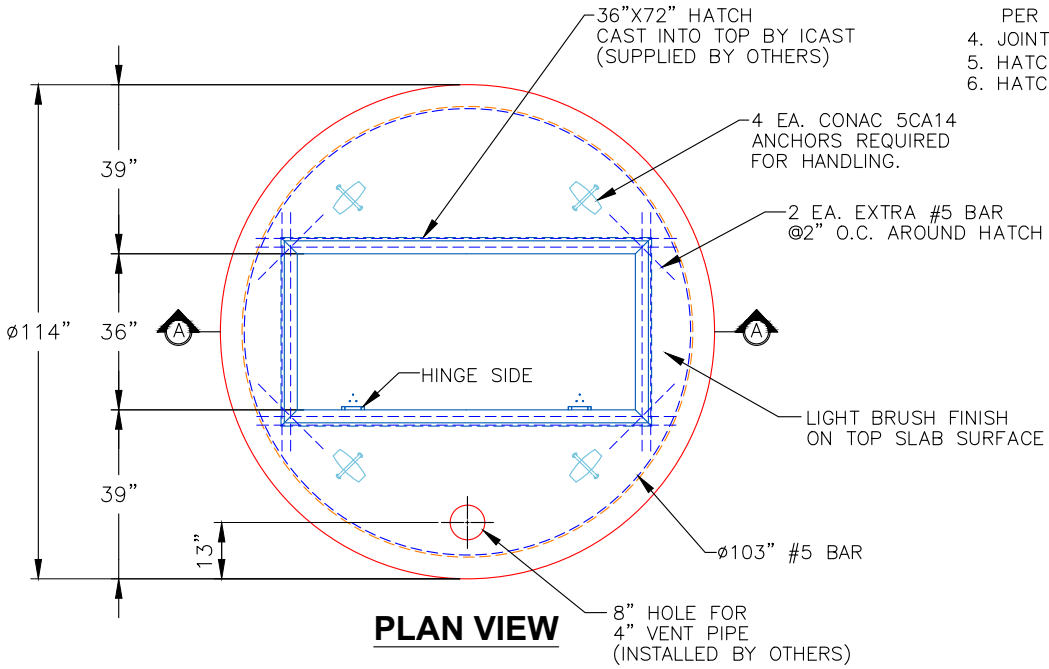

PLAN VIEW

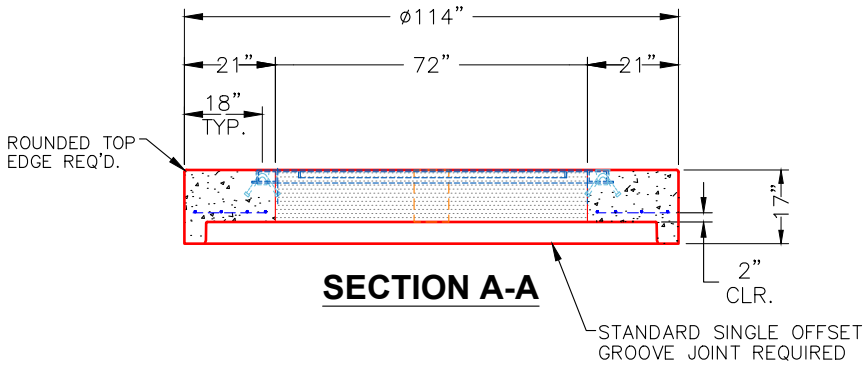

SECTION A-A

Coating (Int): Coating (Ext):	Seam Up: Flat Seam Dn: Groove	Wall Thickness: 9"	Height (Ext): 17"	Weight (Net): 8315 lb Volume (Net): 2.12cu.yd