Job Name: 26-1066 - Gunning Pump Station & Force Main
Job Location: Bardstown, KY
Contractor: Connhurst, LLC

PC: E. Bradley
TECH: Jared - F
Plant: 100

Structure ID: **V V (16)**

Spec: Sanitary	Rim: 559'	Sump: 2.496"	Floor (Bot): 550.833'
Type: Valve Vault	Invert: 551.708'	Floor (Top): 551.5'	Overall Height: 8.167'
Size: 96"	Rim to Invert: 7.292'	Floor Height: 8"	Slack: 0"

Structure Notes: .
1. PER ASTM C478 SPECIFICATIONS.
2. CONCRETE = 4,000 PSI AT 28 DAYS.
3. NO STEPS.
4. HATCH SUPPLIED BY OTHERS.

.
REINFORCING PER ASTM A615 (GRADE 60).
- TOP SLAB (As .31) #5 BARS AT 6" C.C.E.W.
- RISER/WALLS (As .18)
- FLOOR (As .37) #5 BARS AT 10" C.C.E.W.(DOUBLE MAT)

STRUCTURE SUMMARY:

P3)	48" x 48" - CASTING HEIGHT - 0"	0 lb
P2)	96" - MH FLAT TOP w/48"x48" Hatch - 17"	8607 lb
P1)	96" - MH BASE EF Cust. Ht. 08"F (14"EF =142"OD) - 73"	28510 lb
1)	JOINT WRAP - 0.065"x6"x50' CONSEAL CS212	0 lb
1)	JOINT WRAP PRIMER - CONSEAL CS-75 (1 gal.)	0 lb
1)	SECONDARY POUR - EXT. FLANGE	0 lb
1)	96" - Conseal CS-102 1.00" (Double)	0 lb
1)	48" x 48" - Conseal CS-102 1.00" (Double)	0 lb
3)	Hole - 12	0 lb
1)	PSX - 8QRS DD	6 lb
	Structure Total:	37124 lb

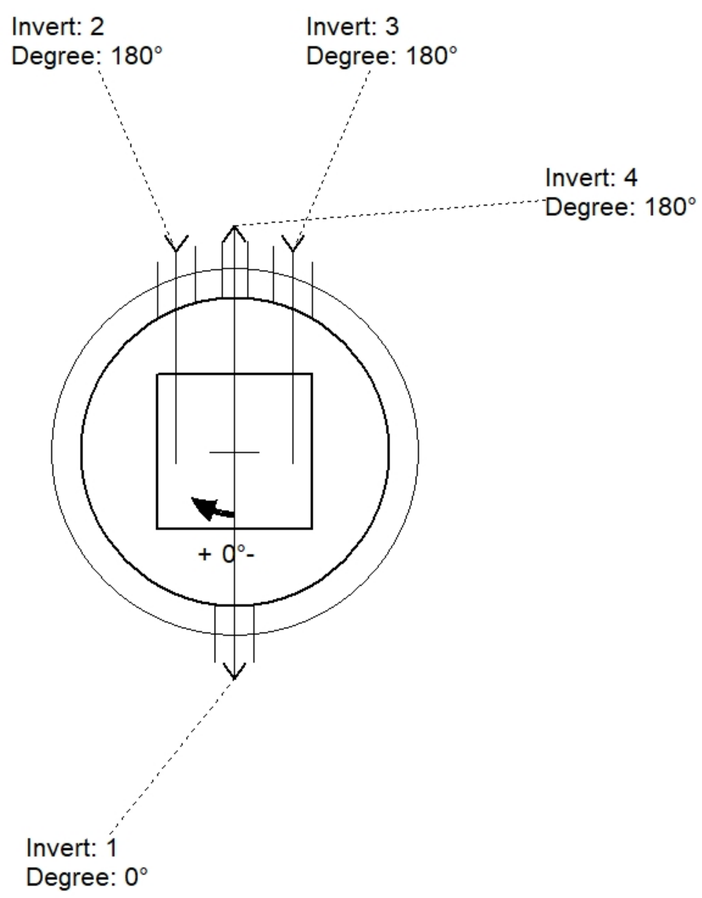

Position	Elev	Angle	Pipe	Pipe OD	Hole	Connector	Up (_)	Ref
Rim	559'							
Reducer								
Invert 1	553.25'	0°	8" DI	9"	12"	Hole 12	19"	P1
Invert 2	553.25'	180°	8" DI	9"	12"	Hole 12	19"	P1
Invert 3	553.25'	180°	8" DI	9"	12"	Hole 12	19"	P1
Invert 4	551.708'	180°	3" PVC SDR35	3.25"	8"	PSX 8QRS DD	-0.004"	P1
Invert 5								
Invert 6								
Invert 7								
Invert 8								

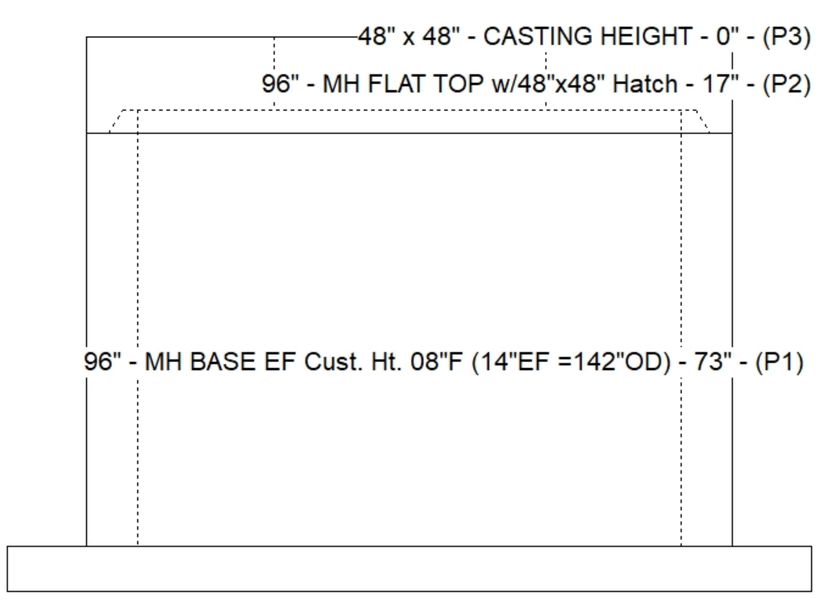

Default - Interior Dimensions

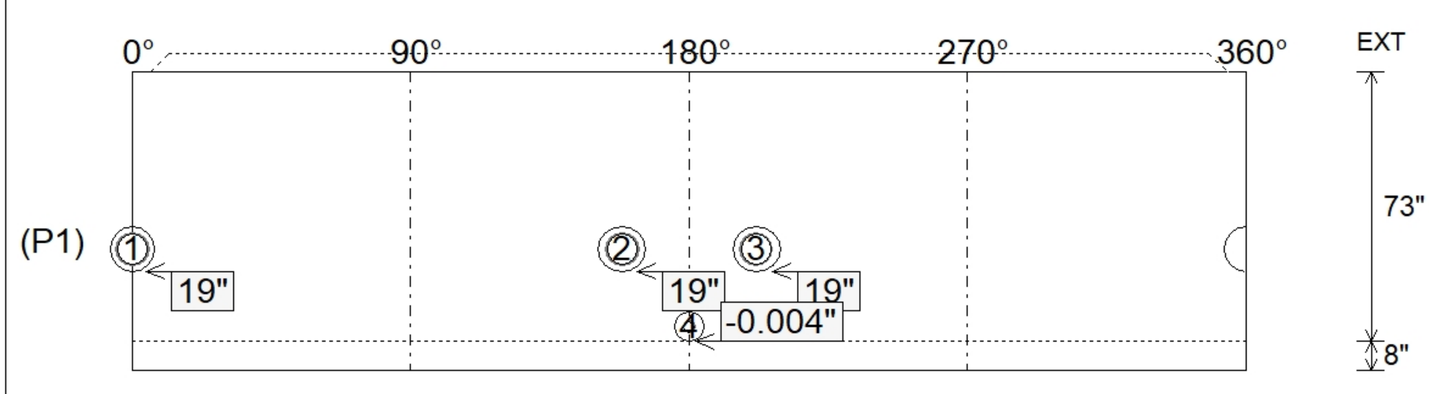

Submittal Drawing
6/5/2026 2:10:50 PM

SUBMITTAL
APPROVED BY: