Job Name: 26-1066 - Gunning Pump Station & Force Main Job Location: Bardstown, KY Contractor: Connhurst, LLC	Plant: 100 6/2/2026 10:56:15 AM	Tech: Jared - F PC: E. Bradley	

Structure ID: 44+80 AR (14)

P4 MH048LD12S MH FLAT TOP w/30"x36" Hatch F/G

P5) 30" x 36" - CASTING (cast in) - 0"	0 lb
P4) 48" - MH FLAT TOP w/30"x36" Hatch F/G - 12"	1237 lb
P3) 48" - MH DH RISER T/F - 36"	2515 lb
P2) 48" - MH DH RISER Custom Ht F/F - 58"	3902 lb
P1) 48" - P.I.P. BY OTHERS - BTM SLAB F/n - 0"	0 lb
1) JOINT WRAP - 0.065"x6"x50' CONSEAL CS212	0 lb
1) JOINT WRAP PRIMER - CONSEAL CS-75 (1 gal.)	0 lb
1) SPECIAL Internal Coating	0 lb
1) HATCH (Alum.) - HALLIDAY H1W 36"x30"	235 lb
3) 48" - Conseal CS-102 1.00" (Double)	0 lb
2) DOGHOUSE - 12"x12"	0 lb
Structure Total:	7889 lb

Structure Notes: .
1. PER ASTM C478 SPECIFICATIONS.
2. CONCRETE = 4,000 PSI AT 28 DAYS.
3. NO STEPS.
4. HATCH BY ICAST (HALLIDAY H1W 30"X36" CAST-IN).
5. INSIDE OF STRUCTURE TO BE SANDBLASTED, THEN A COATING OF TNEMEC 218 TO BE APPLIED, FOLLOWED BY A COATING OF TNEMEC 434, FOLLOWED BY A COATING OF TNEMEC 435.

.
REINFORCING PER ASTM A615 (GRADE 60).
- TOP SLAB #5 BAR AT 6" O.C.E.W
- RISER/WALLS (As .12)

NOTES:
1. PER ASTM C-478 LATEST REVISION
2. CONCRETE: 4,000 PSI AT 28 DAYS.
3. REINFORCEMENT:
   TOP SLAB – #5 BAR @ 6" O.C.E.W.
   PER ASTM A615 (GRADE 60)
4. JOINT SEALANT – 1" CS-102-DOUBLE
5. HATCH: HALLIDAY H1W 30"X36" HATCH PROVIDED BY ICAST.
6. HATCH TO BE CAST INTO TOP SLAB.

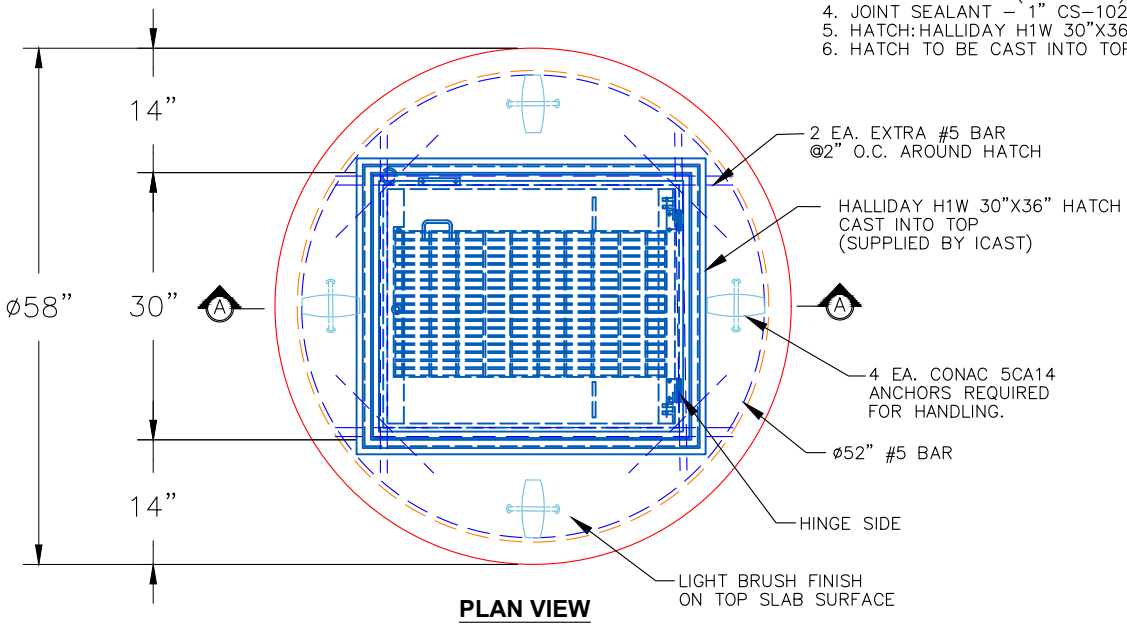

PLAN VIEW

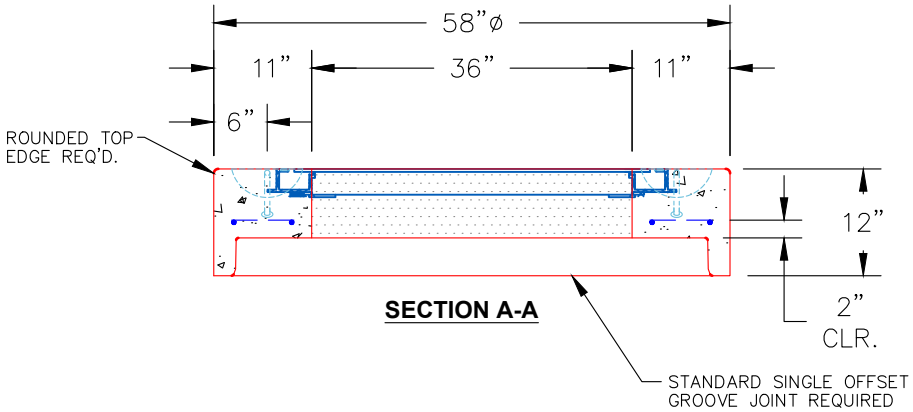

SECTION A-A

Coating (Int): Coating (Ext):	Seam Up: Flat Seam Dn: Groove	Wall Thickness: 5"	Height (Ext): 12"	Weight (Net): 1237 lb Volume (Net): 0.32cu.yd