Job Name: 26-1051 - HAMPTON 500
Job Location: Hampton Station, TN
Contractor: TVA

PC: A. Chambers
TECH: Jared - F
Plant: 100

Structure ID: **7 (11)**

Spec: Storm	Rim: 506.8'	Sump: 2.55"	Floor (Bot): 501.321'
Type: STM.MH	Invert: 502.2'	Floor (Top): 501.988'	Overall Height: 5.438'
Size: 60"	Rim to Invert: 4.6'	Floor Height: 8"	Slack: 0.5"

Structure Notes: .
1. PER ASTM C478 SPECIFICATIONS.
2. CONCRETE = 4,000 PSI AT 28 DAYS.
3. NO INVERT CHANNEL.
4. CASTING BY ICAST (EJ 6488 O BEEHIVE GRATE).

.
REINFORCING PER ASTM A615 (GRADE 60).
- TOP SLAB (As .62) #5 BARS AT 6" C.C.E.W..
- RISER/WALLS (As .18)
- FLOOR (As .37) #5 BARS AT 10" C.C.E.W.

STRUCTURE SUMMARY:

P4) 24" - CASTING HEIGHT - 1.25"	0 lb
P3) 24" - GRADE RING - 6"	405 lb
P2) 60" - MH FLAT TOP w/24" Ctr. Hole - 8"	2429 lb
P1) 60" - MH BASE - 42"	6138 lb
1) CASTING - EJ 6488 O Beehive Grate	250 lb
1) 60" - Conseal CS-102 1.00"	0 lb
2) 24" - Conseal CS-102 1.00"	0 lb
1) Hole - 38	0 lb
1) Hole - 30	0 lb
3) MH Step ML-10-TDS-NCR - 10"	0 lb
Structure Total:	9222 lb

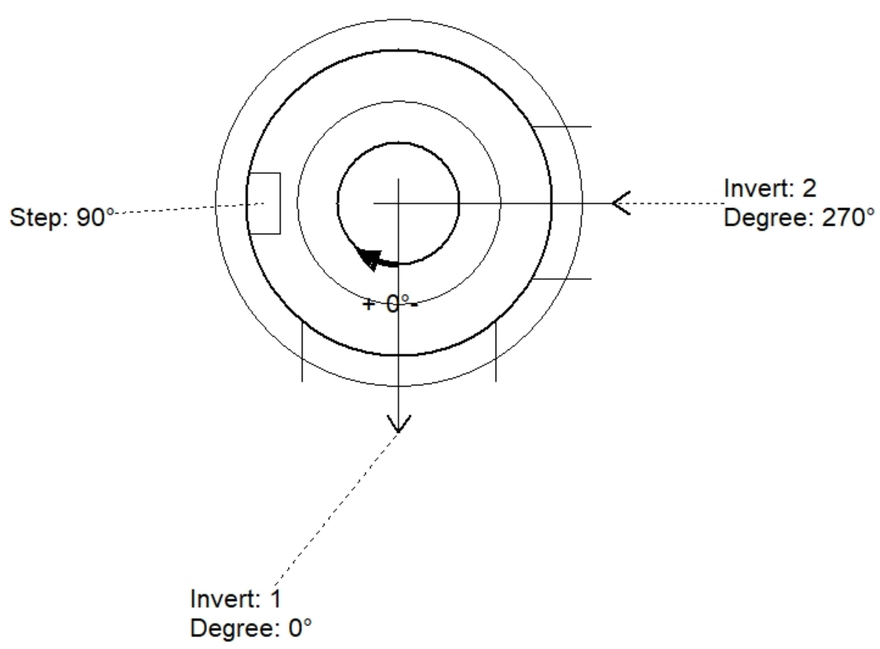

Position	Elev	Angle	Pipe	Pipe OD	Hole	Connector	Up (_)	Ref
Rim	506.8'							
Reducer								
Invert 1	502.2'	0°	30" HDPE	35.1"	38"	Hole 38	0"	P1
Invert 2	502.2'	270°	24" HDPE	27.8"	30"	Hole 30	0.65"	P1
Invert 3								
Invert 4								
Invert 5								
Invert 6								
Invert 7								
Invert 8								

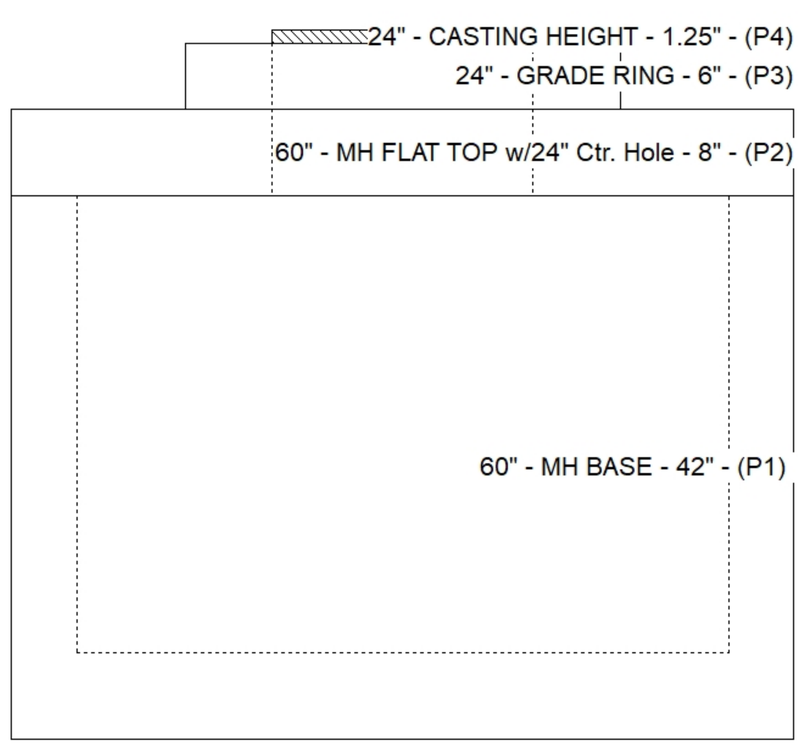

Default - Interior Dimensions

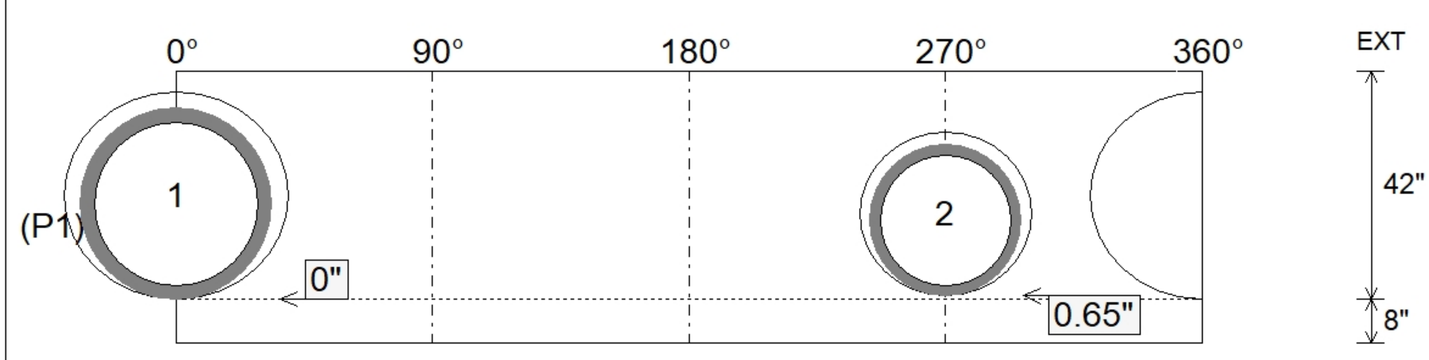

Submittal Drawing
6/18/2026 3:16:17 PM

SUBMITTAL
APPROVED BY: