Job Name: 26-1000P2 Clark Distributing New HQ - Site Structures Job Location: Bowling Green, KY Contractor: Scotty's Contracting & Stone, LLC	Plant: Beaver Dam 8/11/2026 9:22:04 AM	Tech: S. Felletter PC: M. Sullivan	

Structure ID: DBI-2

P2 MH060LD13-24X30RECT MH FLAT TOP w/24"x30" Hole F/G

P3) 24" x 30" - CASTING HEIGHT - 3.50"	0 lb
P2) 60" - MH FLAT TOP w/24"x30" Hole F/G - 13"	2668 lb
P1) 60" - MH BASE Custom Ht T/n - 62"	7523 lb
1) CASTING - HOE KY-460-11 F/G (DBI 11)	421 lb
1) 60" - Conseal CS-102 1.00"	0 lb
1) 24" x 30" - Conseal CS-102 1.00"	0 lb
2) Hole - 44	0 lb
5) MH Step ML-10-TDS-NCR - 10"	0 lb
Structure Total:	10612 lb

Structure Notes: .
1. PER ASTM C478 SPECIFICATIONS.
2. CONCRETE = 4,000 PSI AT 28 DAYS.
3. CASTING BY ICAST (HOE KY-460-11 F/G).
.
REINFORCING PER ASTM A615 (GRADE 60).
- TOP SLAB (As .62) #5 BARS AT 6" C.C.E.W..
- RISER/WALLS (As .18)
- FLOOR (As .37) #5 BARS AT 10" C.C.E.W.

GENERAL NOTES:
1. MANUFACTURED TO ASTM C-478 (LATEST REVISION).
2. CONCRETE 4,000 PSI AT 28 DAYS.
3. REINFORCING: #5 @ 6" C.C. E.W. PER ASTM A615 (GRADE 60)

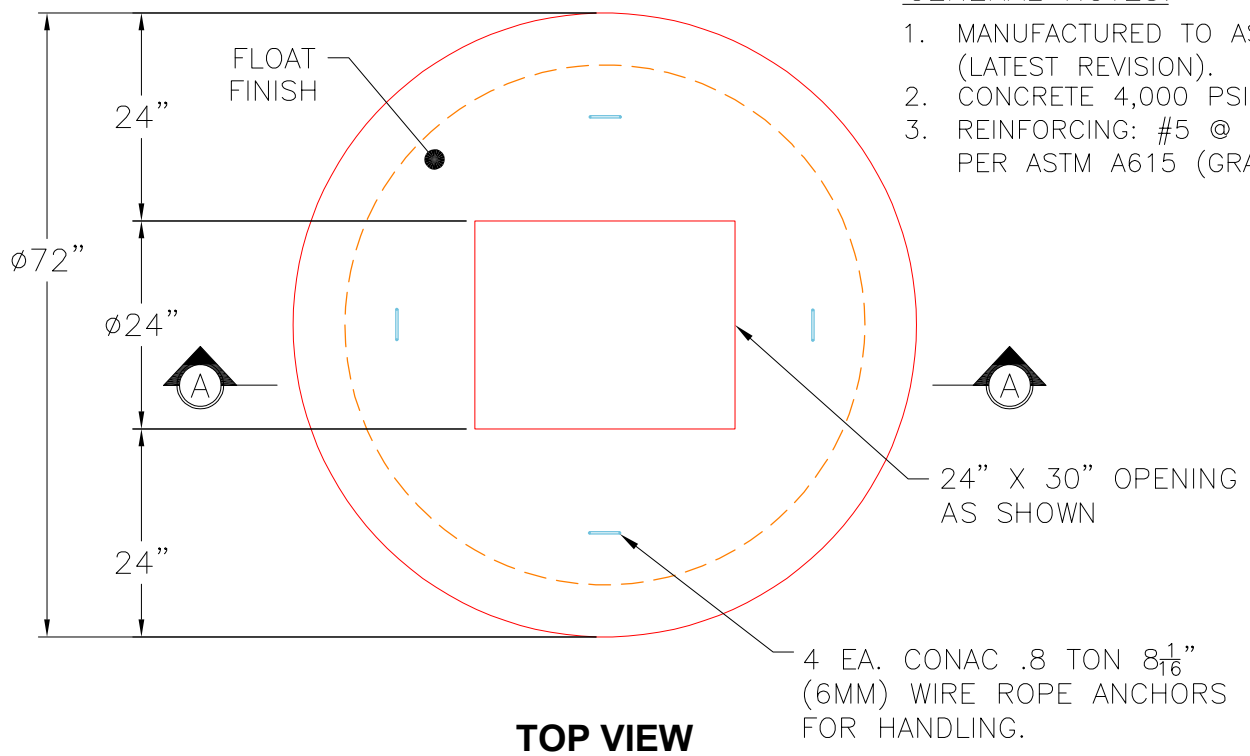

TOP VIEW

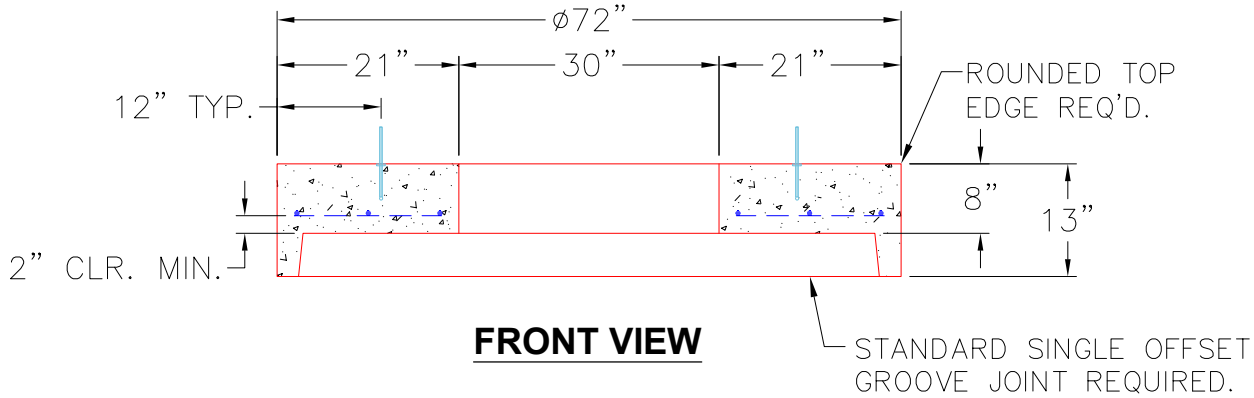

FRONT VIEW

Coating (Int): Coating (Ext):	Seam Up: Flat Seam Dn: Groove	Wall Thickness: 6"	Height (Ext): 13"	Weight (Net): 2668 lb Volume (Net): 0.68cu.yd