Job Name: 26-1000P2 Clark Distributing New HQ - Site Structures Job Location: Bowling Green, KY Contractor: Scotty's Contracting & Stone, LLC	Plant: Beaver Dam 8/11/2026 9:19:06 AM	Tech: S. Felletter PC: M. Sullivan	

Structure ID: DBI-10

P1 MH072BA66 MH BASE T/n

P3) 48" x 48" - CASTING HEIGHT - 4.5"	0 lb
P2) 72" - MH FLAT TOP w/48"x48" Hole F/G - 15"	4411 lb
P1) 72" - MH BASE T/n - 66"	11321 lb
1) CASTING - HOE 918 F/G	228 lb
1) 72" - Conseal CS-102 1.00"	0 lb
1) 48" x 48" - Conseal CS-102 1.00"	0 lb
2) Hole - 44	0 lb
2) Hole - 18	0 lb
6) MH Step ML-10-TDS-NCR - 10"	0 lb
Structure Total:	15960 lb

Structure Notes: .
1. PER ASTM C478 SPECIFICATIONS.
2. CONCRETE = 4,000 PSI AT 28 DAYS.
3. CASTING BY ICAST (HOE 918 F/G).

.
REINFORCING PER ASTM A615 (GRADE 60).
- TOP SLAB (As .62) #5 BARS AT 6" C.C.E.W..
- RISER/WALLS (As .18)
- FLOOR (As .37) #5 BARS AT 10" C.C.E.W.

Rim: 587.36' Rim to Invert: 7.14' Slack: 0.18" Sump: 0" Step Position: 60°

Position	Elev	Angle	Ext. (cw)	Pipe	Pipe OD	Connector	Hole	Horz Size	Up (_)	Offset
Invert 1	580.22'	0°	0"	36" HDPE	41.7"	Hole 44	44"	47.337"	-2.85"	0"
Invert 2	580.22'	120°	90.059"	15" PVC SDR35	15.3"	Hole 18	18"	18.193"	-0.15"	0"
Invert 3	580.22'	210°	157.603"	36" HDPE	41.7"	Hole 44	44"	47.337"	-2.85"	0"
Invert 4	580.22'	295°	221.395"	12" HDPE	14.5"	Hole 18	18"	18.193"	-1.25"	0"
Invert 5										
Invert 6										
Invert 7										
Invert 8										

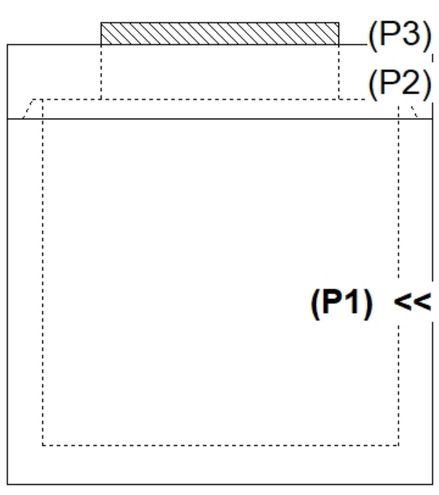

RIGHT-SIDE UP VIEW (int. dimensions)

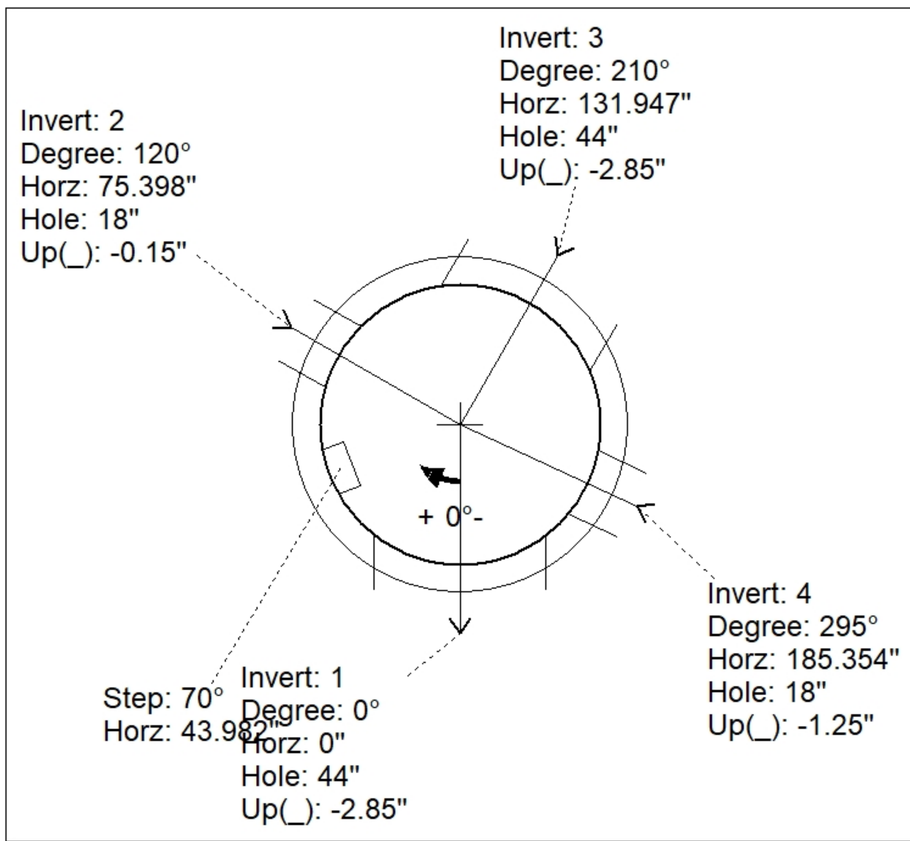

UPSIDE-DOWN VIEW (int. dimenions)

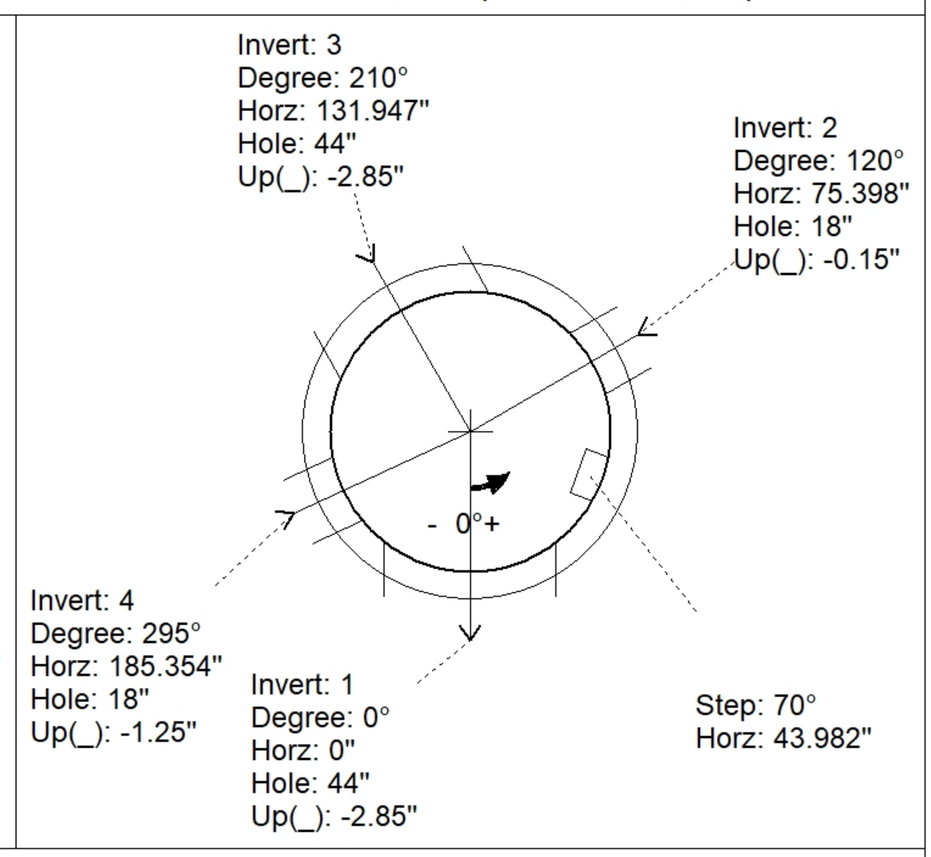

INSIDE WALL DIMENSIONS

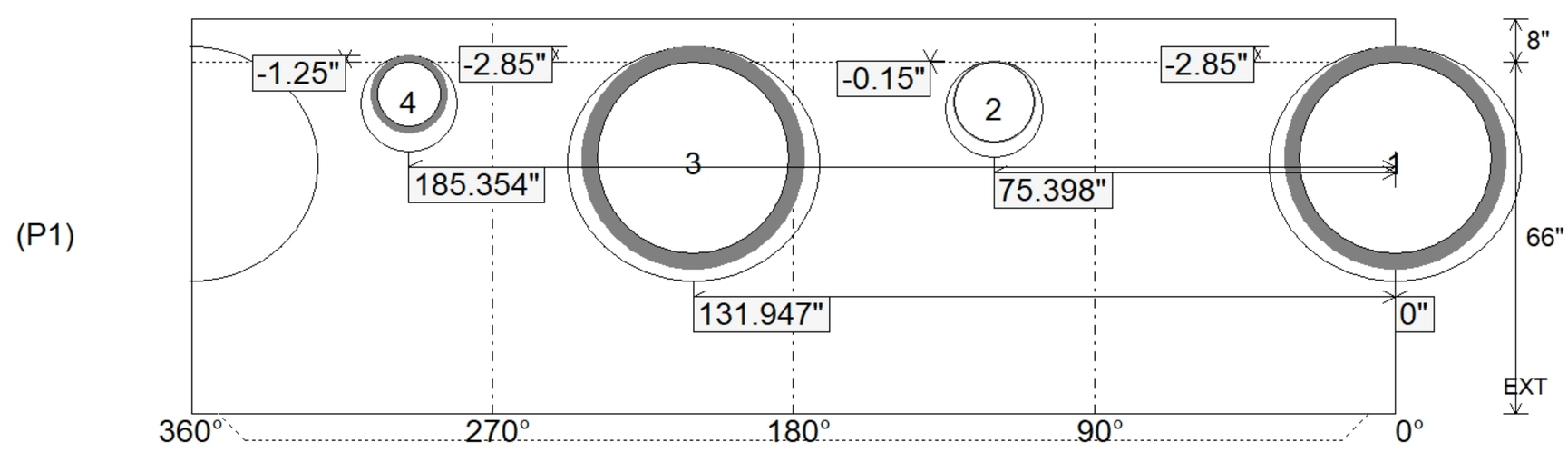

Coating (Int): Coating (Ext):	Seam Up: Tongue Seam Dn: n/a	Wall Thickness: 7" Floor Height: 8"	Height (Int): 66" Height (Ext): 74"	Weight (Net): 11321 lb Volume (Net): 2.89cu.yd