Job Name: 25-4654 - KYTC McCracken Co (251012)
Job Location: Paducah, KY
Contractor: Jim Smith Contracting Co, LLC

Structure ID: 54654 (6)

P1 HWSFBIO18

18" - SLOPED & FLARED BOX I/O

Plant: 100
3/16/2026 8:08:27 AM
Tech: Jared - F
PC: J. Jarvis

~NOTES:

1. CONCRETE: KYTC APPROVED.
2. REINFORCING: #5 BAR @ 12" C/C E.W.–GRADE 60. (WITH 2" CONCRETE COVER MINIMUM)
3. REINFORCING BARS TO BE TACK WELDED OR TIED.
4. PIPE AND LIFTING ANCHOR POCKETS TO BE GROUTED WITH KYTC APPROVED NON-SHRINK GROUT.
5. DRAWING TO BE USED IN CONJUNCTION WITH KYTC STD. DRAWINGS RDB-105-06 & RDB-106-05 AND THE STANDARD SPECIFICATIONS FOR ROAD AND BRIDGE CONSTRUCTION.
6. 3/4" CHAMFER ON ALL EXPOSED EDGES.
7. PREFORMED STEPPED HOLE SIZED AS PER O.D. OF PIPE + 3"–4".

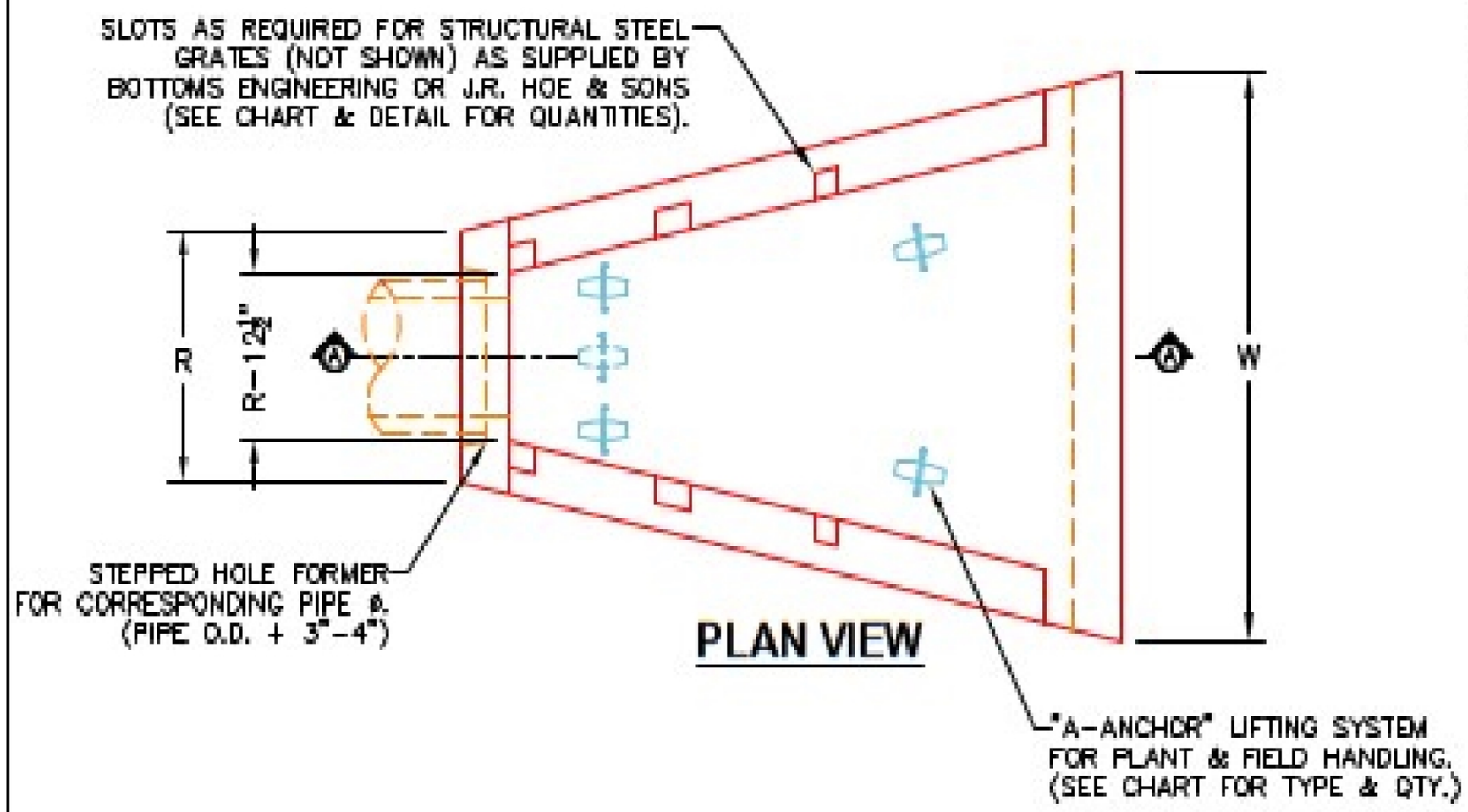

PLAN VIEW

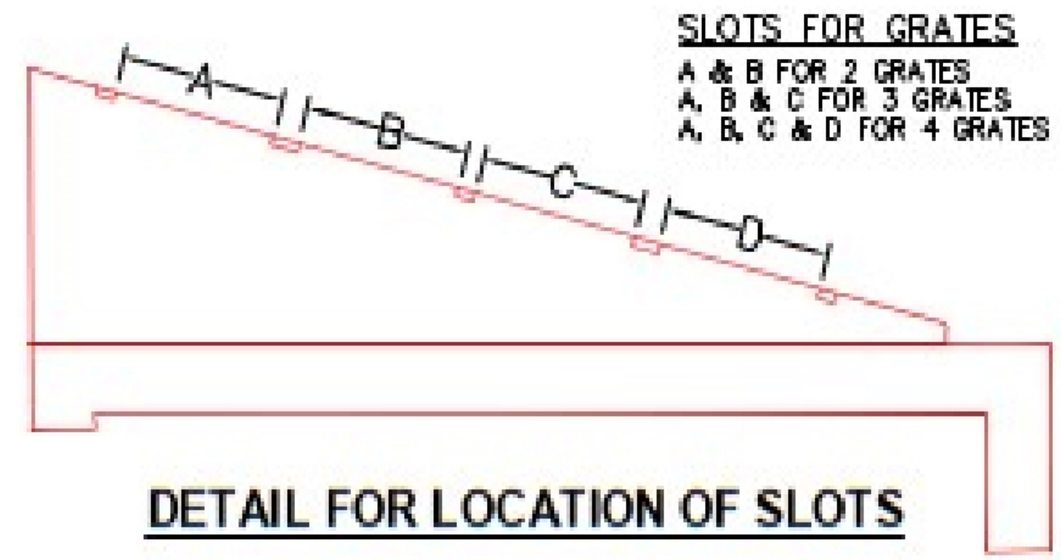

DETAIL FOR LOCATION OF SLOTS

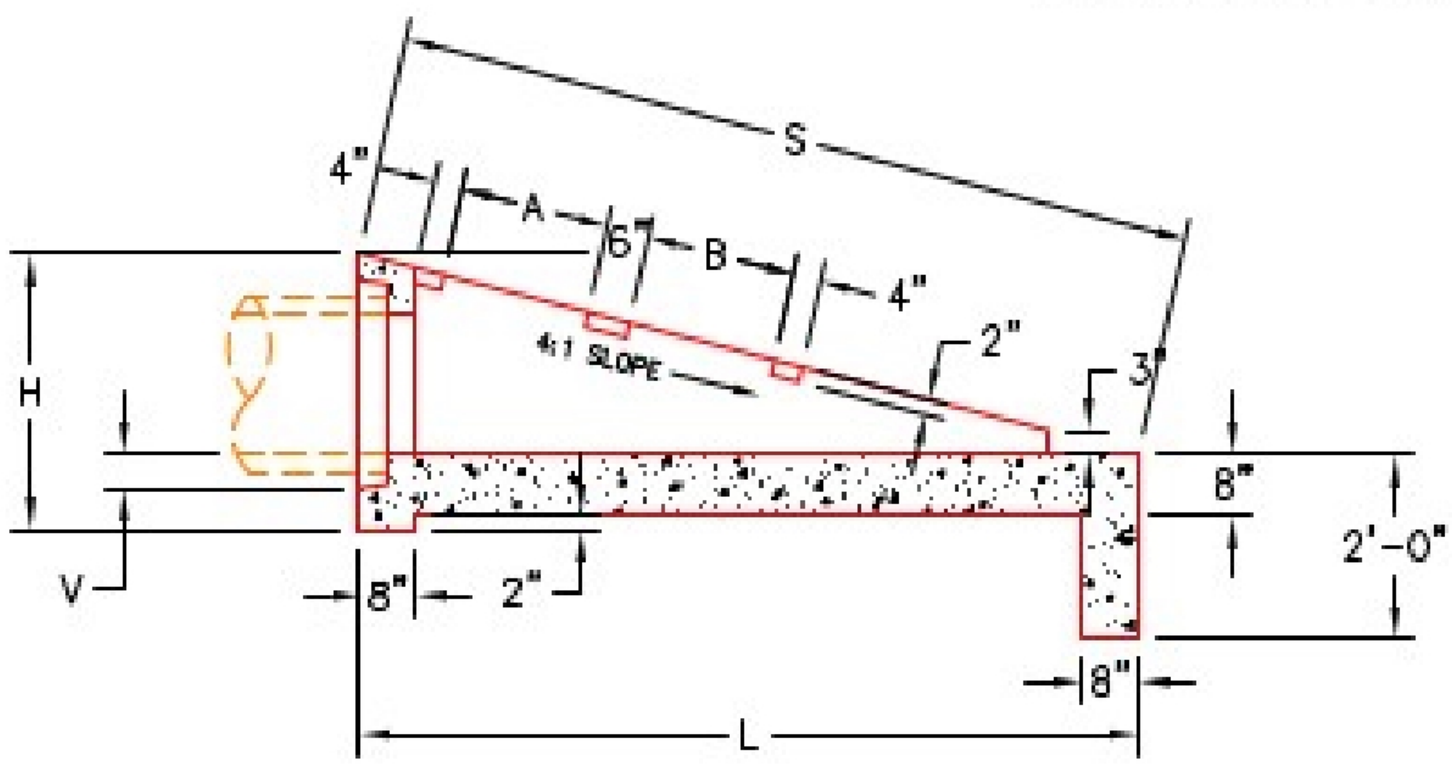

SECTION A-A

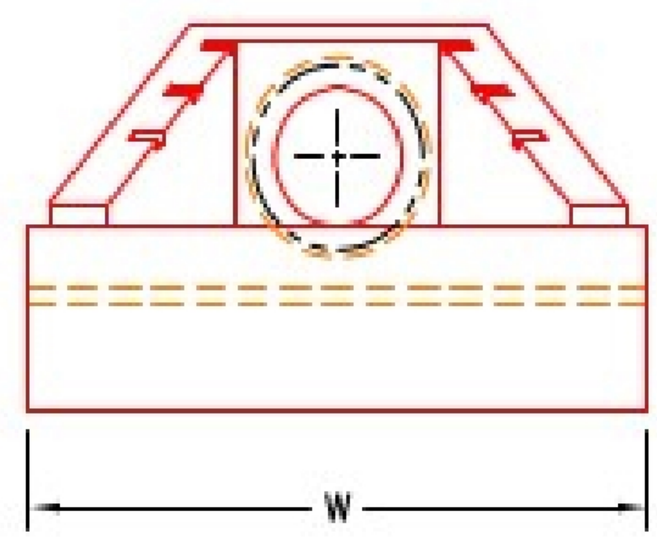

FRONT ELEVATION

DIMENSIONS

PIPE Ø	H	L	S	R	V	W	A	B	C	D	NO. GRATES 2'	NO. GRATES 3'	CONCRETE YD³	LBS. #4 BAR	LIFTING ANCHORS
15"	36"	102"	105 1/2"	35 1/2"	4"	87"	21"	21"	---	---	2 EA.	---	1.8	81	3 EA. CONAC 8CA18
18"	36"	102"	105 1/2"	35 1/2"	4"	87"	21"	21"	---	---	2 EA.	---	1.8	81	3 EA. CONAC 8CA18
24"	43"	128"	132"	42 1/2"	5"	107"	33"	33"	---	---	---	2 EA.	2.7	111	4 EA. CONAC 8CA18
30"	50"	154"	158 1/2"	49 1/2"	6"	127"	33"	33"	21"	---	1 EA.	2 EA.	3.8	148	4 EA. CONAC 8CA18
36"	57"	180"	185 1/2"	56 1/2"	6"	147"	33"	33"	21"	21"	2 EA.	2 EA.	5.1	187	4 EA. CONAC 8CA18

INFRASTRUCTURE PRECAST, INC.
981 WEST 7TH ST., BEAVER DAM, KY. 42320
PHONE: (270) 363-2238, FAX: (270) 298-7424

KYTC 15"–36" SLOPED & FLARED BOX INLET–OUTLET HEADWALL (NO SKEW)

DRAWING NO.: ET-KYTC-124	DATE: 01-14-25
REVIEWED BY: J.H. ROSS, PE	DRAWN BY: H. RICHARDS
WEB: WWW.ICASTINC.COM	SCALE: NTS

THIS DRAWING IS THE PROPERTY OF INFRASTRUCTURE PRECAST, INC. ANY USE OR DUPLICATION OF THIS DRAWING WITHOUT PRIOR AUTHORIZATION IS STRICTLY PROHIBITED.