Job Name: 25-4547 - WWTP Improvements & Hydraulic Expansion
Job Location: Shepherdsville, KY
Contractor: Pace Contracting, LLC

PC: J Jarvis
TECH: Jared - F
Plant: 100

Structure ID: **MH-9**

Spec: Sanitary	Rim: 450.5'	Sump: 2"	Floor (Bot): 436.333'
Type: SAN.MH	Invert: 437'	Floor (Top): 436.833'	Overall Height: 14.083'
Size: 48"	Rim to Invert: 13.5'	Floor Height: 6"	Slack: 1"

Structure Notes: .
1. PER ASTM C478 SPECIFICATIONS.
2. CONCRETE = 4,000 PSI AT 28 DAYS.
3. CASTING SUPPLIED BY I-CAST (HOE MC-375 F/C SANITARY).
4. 8.5" EXTERNAL CHIMNEY SEAL BY I-CAST.

.
REINFORCING PER ASTM A615 (GRADE 60).
- CONE (As .12)
- RISER/WALLS (As .12)
- FLOOR (As .31) #5 BARS AT 12" C.C.E.W.

STRUCTURE SUMMARY:

P5)	24" - CASTING HEIGHT - 7"	0 lb
P4)	48" - ECC CONE w/ 24" HOLE - 24"	1550 lb
P3)	48" - MH RISER - 48"	3353 lb
P2)	48" - MH RISER - 60"	4192 lb
P1)	48" - MH BASE - 24"	2911 lb
1)	Chimney Seal - Cretex Chimney Seal	10 lb
1)	48" - MH INVERT CHANNEL - FULL HEIGHT	1440 lb
1)	JOINT WRAP - 0.065"x6"x50' CONSEAL CS212	0 lb
1)	JOINT WRAP PRIMER - CONSEAL CS-75 (1 gal.)	0 lb
1)	CASTING - HOE MC-375 F/C Sanitary	271 lb
3)	48" - Conseal CS-102 1.00" (Double)	0 lb
1)	24" - Conseal CS-102 1.00" (Double)	0 lb
2)	PSX - 12M NYLO	16 lb
12)	MH Step ML-10-TDS-NCR - 10"	0 lb
	Structure Total:	13743 lb

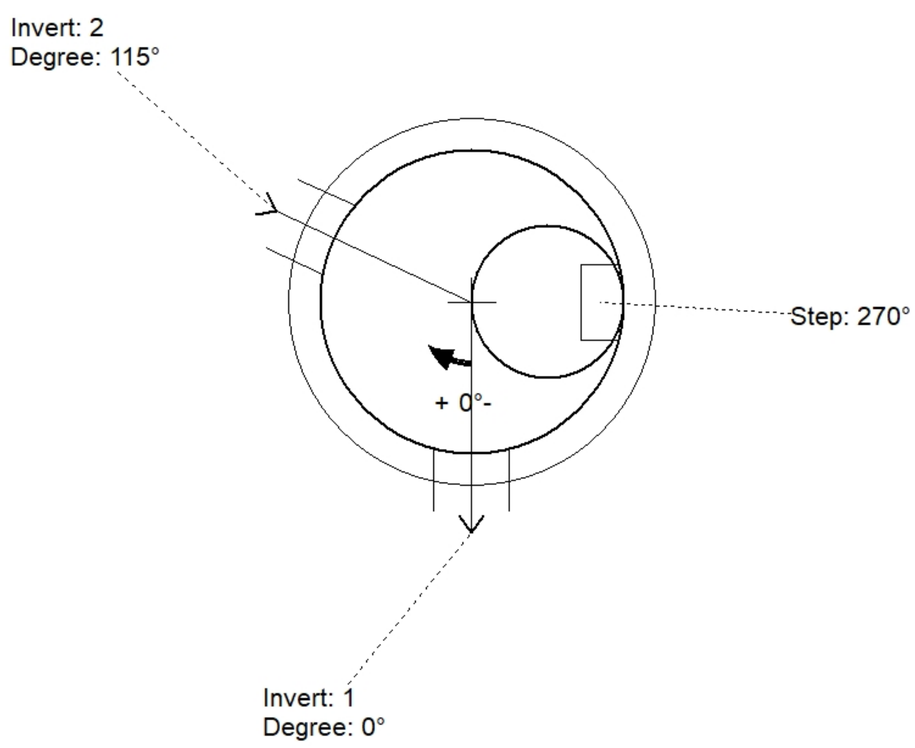

Position	Elev	Angle	Pipe	Pipe OD	Hole	Connector	Up (_)	Ref
Rim	450.5'							
Reducer								
Invert 1	437'	0°	8" DI	9"	12"	PSX 12M NYLO	0"	P1
Invert 2	437.1'	115°	8" DI	9"	12"	PSX 12M NYLO	1.2"	P1
Invert 3								
Invert 4								
Invert 5								
Invert 6								
Invert 7								
Invert 8								

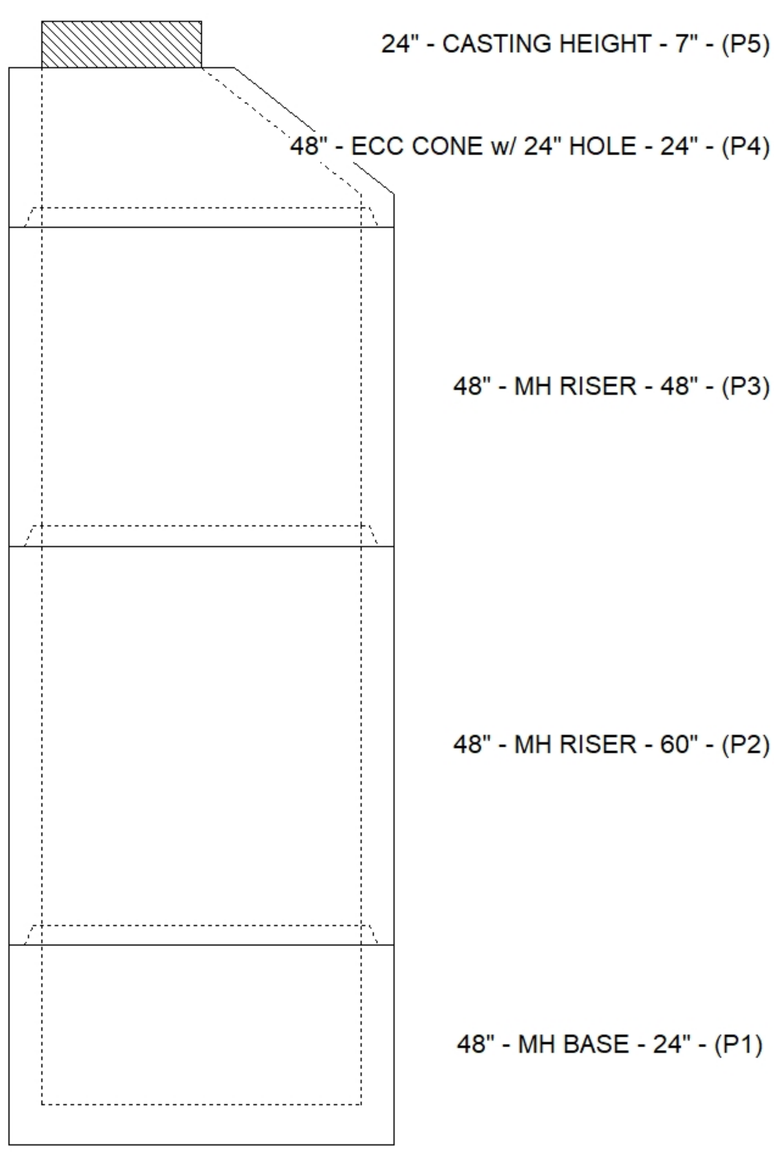

Default - Interior Dimensions

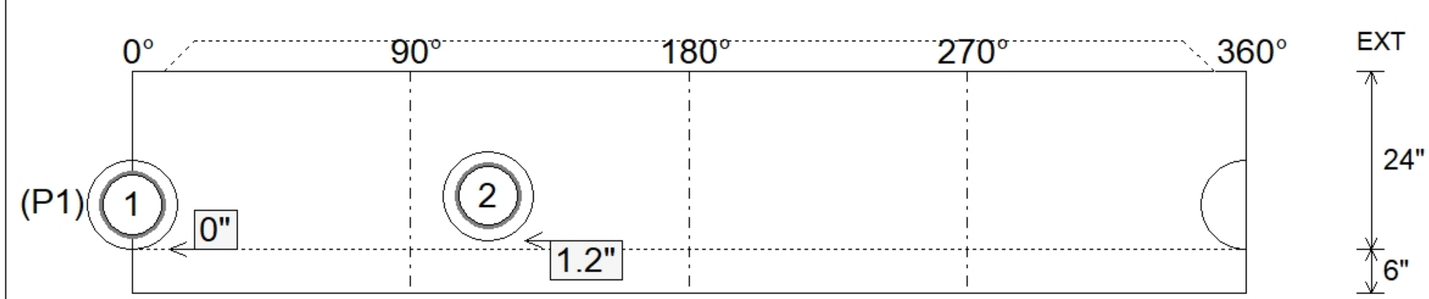

Submittal Drawing
6/8/2026 10:33:41 AM

SUBMITTAL
APPROVED BY: