Job Name: 25-4547 - WWTP Improvements & Hydraulic Expansion
Job Location: Shepherdsville, KY
Contractor: Pace Contracting, LLC

PC: J Jarvis
TECH: Jared - F
Plant: 100

Structure ID: **MH-10**

Spec: Sanitary	Rim: 453.9'	Sump: 2"	Floor (Bot): 435.733'
Type: SAN.MH w/Ext. Drop	Invert: 436.4'	Floor (Top): 436.233'	Overall Height: 18.083'
Size: 48"	Rim to Invert: 17.5'	Floor Height: 6"	Slack: 1"

Structure Notes: .
1. PER ASTM C478 SPECIFICATIONS.
2. CONCRETE = 4,000 PSI AT 28 DAYS.
3. CASTING SUPPLIED BY I-CAST (HOE MC-375 F/C SANITARY).
4. 8.5" EXTERNAL CHIMNEY SEAL BY I-CAST.
5. EXTERIOR DROP ASSEMBLY @166.

.
REINFORCING PER ASTM A615 (GRADE 60).
- CONE (As .12)
- RISER/WALLS (As .12)
- FLOOR (As .31) #5 BARS AT 12" C.C.E.W.

STRUCTURE SUMMARY:

P5) 24" - CASTING HEIGHT - 7"	0 lb
P4) 48" - ECC CONE w/ 24" HOLE - 42"	3200 lb
P3) 48" - MH RISER w/DROP - 60"	6758 lb
P2) 48" - MH RISER w/DROP - 72"	8128 lb
P1) 48" - MH BASE w/DROP - 30"	3316 lb
1) Chimney Seal - Cretex Chimney Seal	10 lb
1) 48" - MH INVERT CHANNEL - FULL HEIGHT	1440 lb
1) JOINT WRAP - 0.065"x6"x50' CONSEAL CS212	0 lb
1) JOINT WRAP PRIMER - CONSEAL CS-75 (1 gal.)	0 lb
1) CASTING - HOE MC-375 F/C Sanitary	271 lb
3) 48" - Conseal CS-102 1.00" (Double)	0 lb
1) 24" - Conseal CS-102 1.00" (Double)	0 lb
2) PSX - 12M NYLO	16 lb
1) Drop Tee - 6" PVC	0 lb
1) Drop Elbow - 6" PVC	0 lb
17) MH Step ML-10-TDS-NCR - 10"	0 lb
Structure Total:	23139 lb

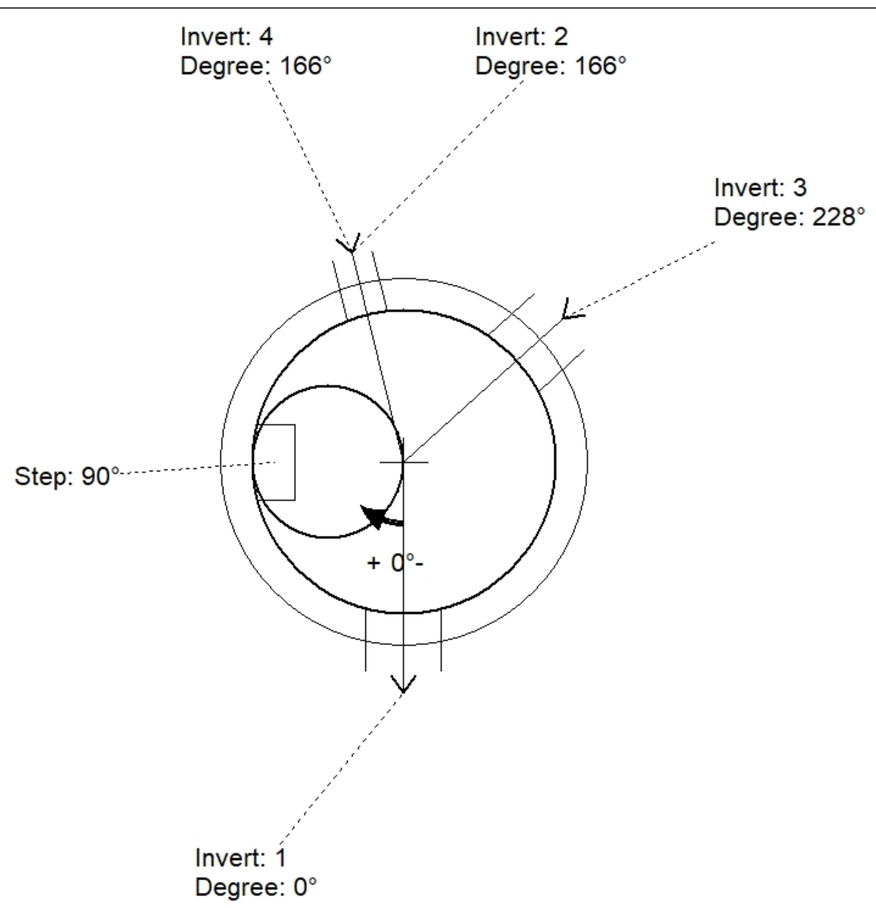

Position	Elev	Angle	Pipe	Pipe OD	Hole	Connector	Up (_)	Ref
Rim	453.9'							
Reducer								
Invert 1	436.4'	0°	8" DI	9"	12"	PSX 12M NYLO	0"	P1
Invert 2	446.5'	166°	6" PVC SDR35	6.25"	6.5"	Drop Tee 6" PVC	16.7"	P3
Invert 3	436.5'	228°	8" DI	9"	12"	PSX 12M NYLO	1.2"	P1
Invert 4	436.7'	166°	6" PVC SDR35	6.25"	6.5"	Drop Elbow 6" PVC	5.35"	P1
Invert 5								
Invert 6								
Invert 7								
Invert 8								

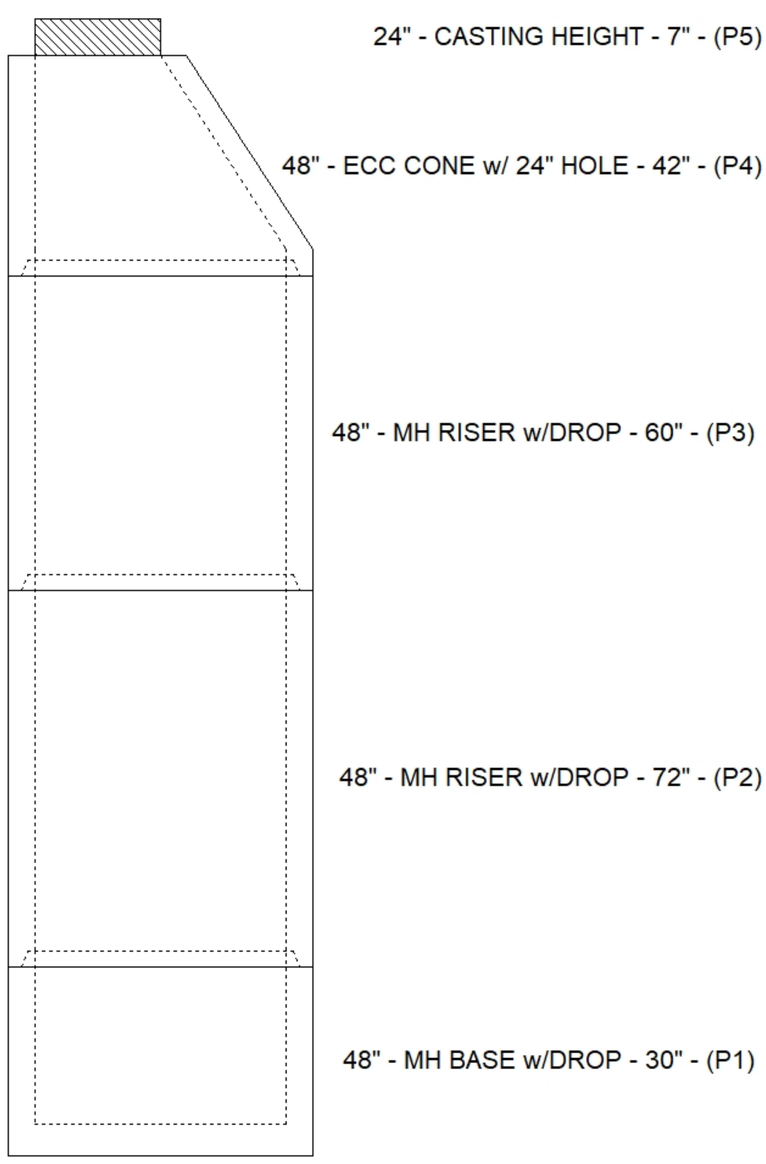

Default - Interior Dimensions

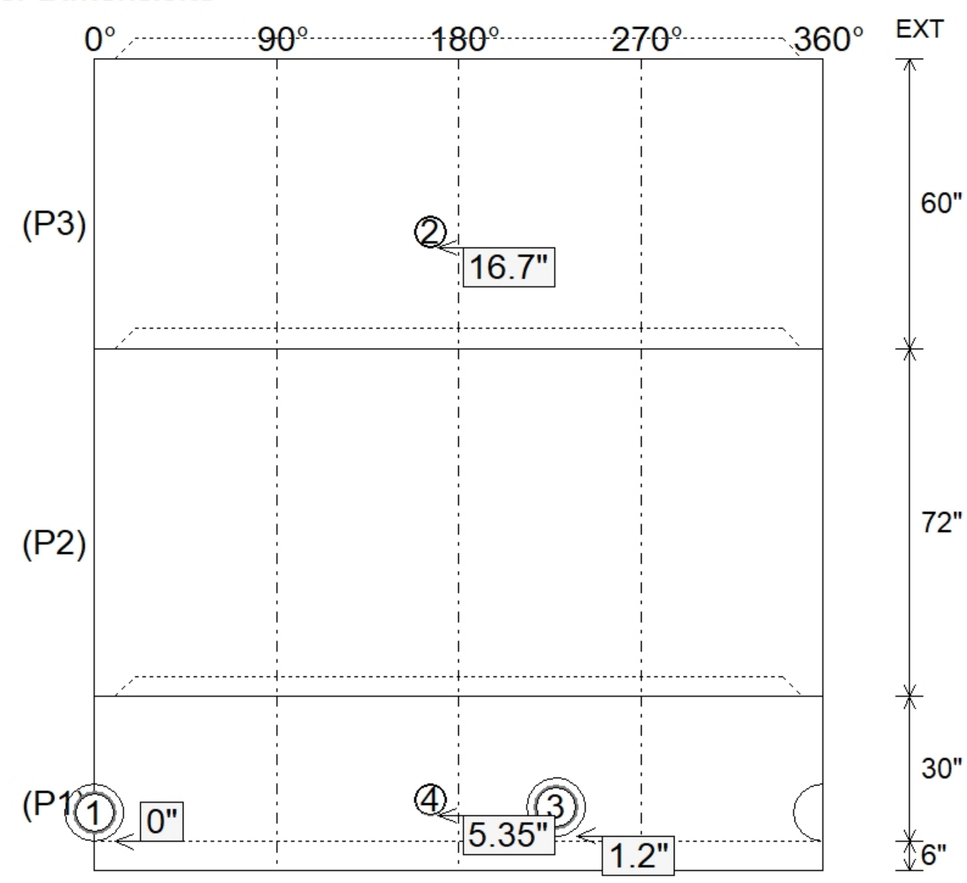

Submittal Drawing
6/8/2026 10:33:41 AM

SUBMITTAL
APPROVED BY: