Job Name: 25-4508 - Georgetown Commons Target Job Location: Georgetown, KY Contractor: Winwater Hartford KY Co.	Plant: 100 5/28/2026 11:25:29 AM	Tech: Jared - F PC: A. Chambers	

Structure ID: 4 (7)

P1 BX2436-08BVF BOX BASE 8inW, 8inF, Variable Ht F/n

P2) 24" x 36" - CASTING HEIGHT - 6"	0 lb
P1) 24" x 36" - BOX BASE 8inW, 8inF, Variable Ht F/n - 43"	5328 lb
1) CASTING - HOE 470 SET LV (F/G/H)	394 lb
1) 24" x 36" - Conseal CS-102 1.00"	0 lb
2) Hole - 24	0 lb
Structure Total:	5722 lb

Structure Notes:
1. PER ASTM C913 SPECIFICATIONS.
2. CONCRETE = 4,000 PSI AT 28 DAYS.
3. NO STEPS AND NO INVERT CHANNEL.
4. CASTING BY ICAST (HOE 470 SET LV (F/G/H)).

REINFORCING PER ASTM A615 (GRADE 60).
- WALLS (As .12) #5 BARS AT 12" C.C.E.W.
- FLOOR (As .12) #5 BARS AT 12" C.C.E.W.

Rim: 871' Rim to Invert: 4' Slack: 0.625" Sump: 1.625" Step Position:

Position	Elev	Angle	Ext. (cw)	Pipe	Pipe OD	Connector	Hole	Horz Size	Up (_)	Offset
Invert 1	867'	0°	20"	18" HDPE	21.2"	Hole 24	24"	24"	0"	0"
Invert 2	867'	180°	20"	18" HDPE	21.2"	Hole 24	24"	24"	0"	0"
Invert 3										
Invert 4										
Invert 5										
Invert 6										
Invert 7										
Invert 8										

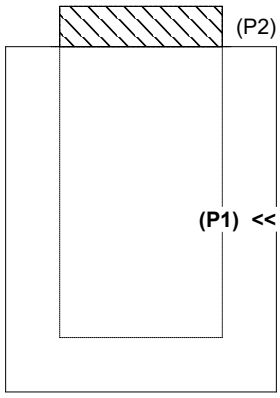

RIGHT-SIDE UP VIEW (int. dimensions)

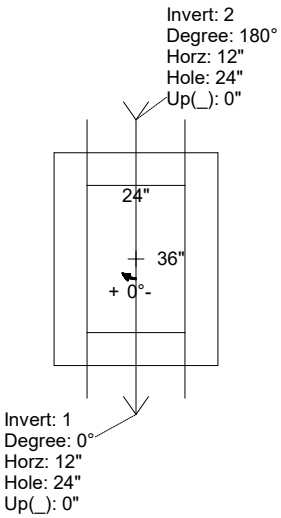

UPSIDE-DOWN VIEW (int. dimenions)

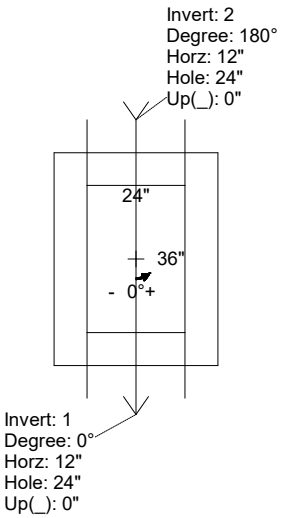

INSIDE WALL DIMENSIONS

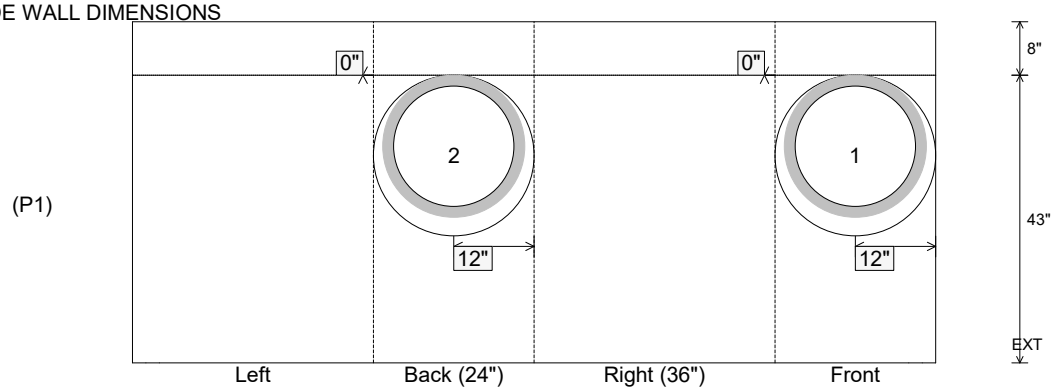

Coating (Int): Coating (Ext):	Seam Up: Flat Seam Dn: n/a	Wall Thickness: 8" Floor Height: 8"	Height (Int): 43" Height (Ext): 51"	Weight (Net): 5328 lb Volume (Net): 1.36cu.yd