Job Name: 25-4490P2 Heartland Meadows Subdivision Job Location: Elizabethtown, KY 40165 Contractor: Kauffeld Brothers Construction	Plant: 100 7/30/2026 10:23:13 AM	Tech: Jared - A PC: Celina Goff	

Structure ID: CB 5-65 (97)

P1 BX24300808VF **BOX BASE 8inW, 8inF, Variable Ht**

P2) 24" x 30" - CASTING HEIGHT - 6"	0 lb
P1) 24" x 30" - BOX BASE 8inW, 8inF, Variable Ht - 38"	4630 lb
1) CASTING - HOE 360 L Vane Set (F/G/H)	362 lb
1) 24" x 30" - Conseal CS-102 1.00"	0 lb
1) Hole - 18	0 lb

Structure Total:	4992 lb

Structure Notes: .
1. HOE 360 FLAT SET PROVIDED BY ICAST.
2. PER ASTM C913 SPECIFICATIONS.
3. CONCRETE = 4,000 PSI AT 28 DAYS.
4. NO INVERT CHANNEL.
5. REINFORCING PER ASTM A615 (GRADE 60).
- WALLS (As .12) #5 BARS AT 12" C.C.E.W.
- FLOOR (As .12) #5 BARS AT 12" C.C.E.W.

Rim: 865.59' Rim to Invert: 3.71' Slack: 0.52" Sump: 0" Step Position:

Position	Elev	Angle	Ext. (cw)	Pipe	Pipe OD	Connector	Hole	Horz Size	Up (_)	Offset
Invert 1	861.88'	195°	22.125"	12" HDPE	14.5"	Hole 18	18"	18.635"	-1.25"	-3.9"
Invert 2										
Invert 3										
Invert 4										
Invert 5										
Invert 6										
Invert 7										
Invert 8										

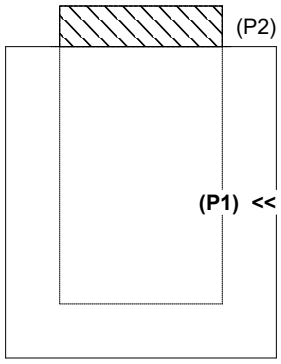

RIGHT-SIDE UP VIEW (int. dimensions)

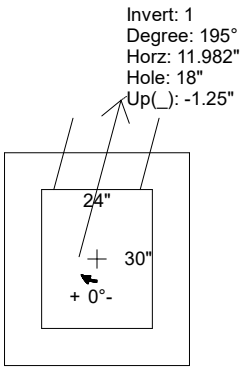

UPSIDE-DOWN VIEW (int. dimenions)

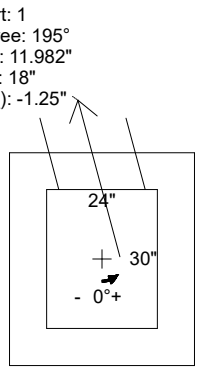

INSIDE WALL DIMENSIONS

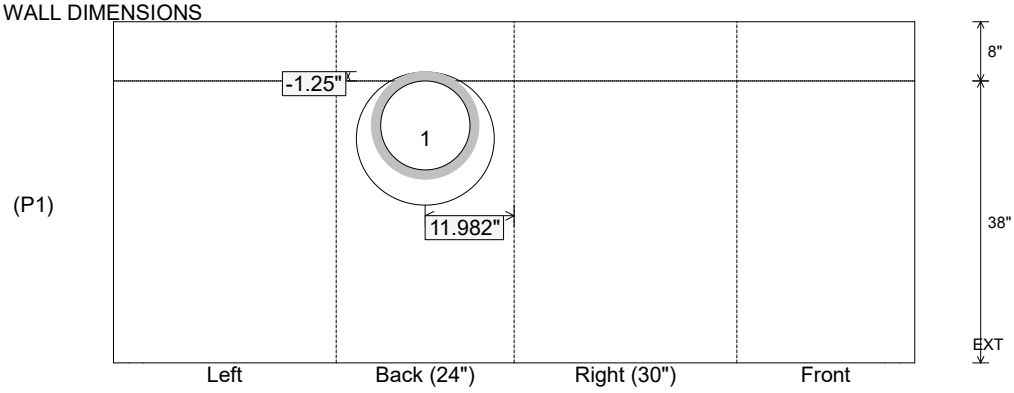

Coating (Int): Coating (Ext):	Seam Up: Flat Seam Dn: n/a	Wall Thickness: 8" Floor Height: 8"	Height (Int): 38" Height (Ext): 46"	Weight (Net): 4630 lb Volume (Net): 1.18cu.yd