Job Name: 25-4490P2 Heartland Meadows Subdivision Job Location: Elizabethtown, KY 40165 Contractor: Kauffeld Brothers Construction	Plant: 100 7/30/2026 10:22:50 AM	Tech: Jared - A PC: Celina Goff	

Structure ID: CB 4-48 (53)

P1 BX3636-08BAVF **BOX BASE 8inW, 8inF, Variable Ht**

P3) 24" x 36" - CASTING HEIGHT - 6"	0 lb
P2) 36" x 36" - CB FLAT TOP 8"W w/24"x36" HOLE - 8"	1235 lb
P1) 36" x 36" - BOX BASE 8inW, 8inF, Variable Ht - 46"	6472 lb
1) CASTING - HOE 470 SET LV (F/G/H)	394 lb
1) 36" x 36" - Conseal CS-102 1.00"	0 lb
1) 24" x 36" - Conseal CS-102 1.00"	0 lb
1) Hole - 30	0 lb
1) Hole - 24	0 lb
Structure Total:	8101 lb

Structure Notes: .
1. HOE 470 FLAT SET PROVIDED BY ICAST.
2. PER ASTM C913 SPECIFICATIONS.
3. CONCRETE = 4,000 PSI AT 28 DAYS.
4. NO INVERT CHANNEL.
5. REINFORCING PER ASTM A615 (GRADE 60).
- TOP SLAB (As .62) #5 BARS AT 6" C.C.E.W.
- WALLS (As .12) #5 BARS AT 12" C.C.E.W.
- FLOOR (As .12) #5 BARS AT 12" C.C.E.W.

Rim: 871.92' Rim to Invert: 5' Slack: 0" Sump: 0" Step Position:

Position	Elev	Angle	Ext. (cw)	Pipe	Pipe OD	Connector	Hole	Horz Size	Up (_)	Offset
Invert 1	866.92'	180°	26"	24" HDPE	27.8"	Hole 30	30"	30"	-1.9"	0"
Invert 2	866.92'	270°	26"	18" HDPE	21.2"	Hole 24	24"	24"	-1.6"	0"
Invert 3										
Invert 4										
Invert 5										
Invert 6										
Invert 7										
Invert 8										

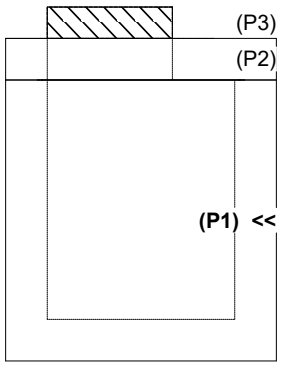

RIGHT-SIDE UP VIEW (int. dimensions)

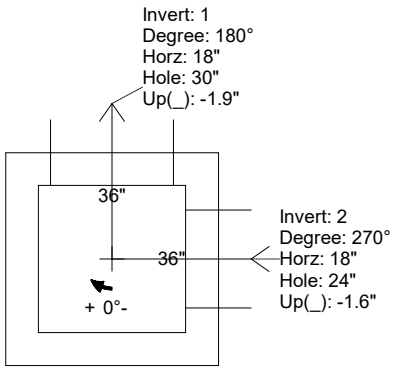

UPSIDE-DOWN VIEW (int. dimenions)

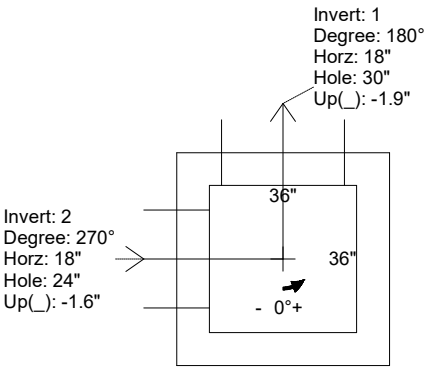

INSIDE WALL DIMENSIONS

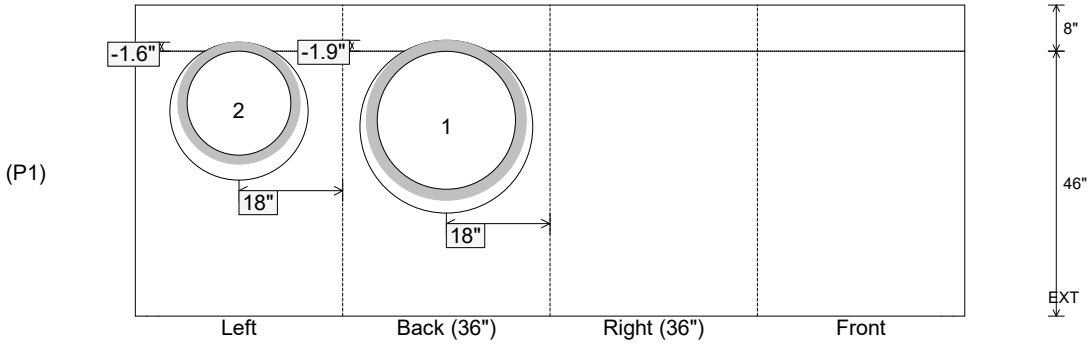

Coating (Int): Coating (Ext):	Seam Up: Flat Seam Dn: n/a	Wall Thickness: 8" Floor Height: 8"	Height (Int): 46" Height (Ext): 54"	Weight (Net): 6472 lb Volume (Net): 1.65cu.yd