Job Name: 25-4457B - INDOT Floyd Co R-42570-A Job Location: New Albany, IN Contractor: William & Charles Construction, LLC	Plant: 100 9/23/2026 11:22:21 AM	Tech: Jared - F PC: E. Bradley	

Structure ID: INLT-M109

P1 BX2446-06W08F-BAVF **BOX BASE 6inW, 8inF, Variable Ht F/n**

P2) 24" x 46" - CASTING HEIGHT - 8"	0 lb
P1) 24" x 46" - BOX BASE 6inW, 8inF, Variable Ht F/n - 47"	4900 lb
1) HOE R-3287-5 INDOT Type 5 FRAME & GRATE	250 lb
1) 24" x 46" - Conseal CS-102 1.00"	0 lb
2) Hole - 22	0 lb
Structure Total:	5150 lb

NOTE:
Walls: 6"
Floor: 8"

Structure Notes: .
INDOT STATE PROJECT
1. INDOT INLET TYPE HA5 / ASTM C913 SPEC'S.
2. CONCRETE = 4,000 PSI AT 28 DAYS.
3. NO STEPS AND NO INVERT CHANNEL.
4. CASTING BY ICAST (HOE R-3287-5 INDOT Type 5 FRAME & GRATE)
.
REINFORCING PER ASTM A615 (GRADE 60).
- WALLS (As .31) #5 BARS AT 12" C.C.E.W.
- FLOOR (As .31) #5 BARS AT 12" C.C.E.W.

Rim: 848.82' Rim to Invert: 4.49' Slack: 1.13" Sump: 2.25" Step Position:

Position	Elev	Angle	Ext. (cw)	Pipe	Pipe OD	Connector	Hole	Horz Size	Up (_)	Offset
Invert 1	844.33'	180°	18"	15" RCP B WALL	19.5"	Hole 22	22"	22"	0"	0"
Invert 2	844.33'	0°	18"	15" RCP B WALL	19.5"	Hole 22	22"	22"	0"	0"
Invert 3										
Invert 4										
Invert 5										
Invert 6										
Invert 7										
Invert 8										

FIRST POUR DRAWING

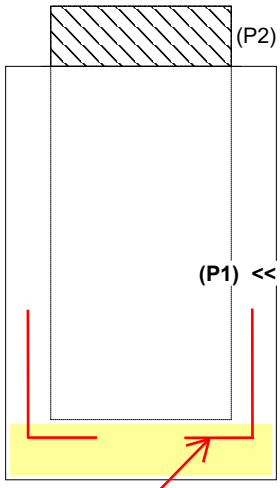

1ST POUR (FLOOR)
WET STICK 10" X 18" #5 L-BARS @ 12" C.C.E.W. (GRADE 60) OUT TOP OF FLOOR FOR WALL POUR TIE-IN

RIGHT-SIDE UP VIEW (int. dimensions)

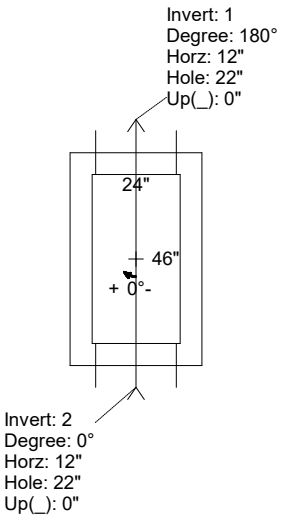

UPSIDE-DOWN VIEW (int. dimenions)

WEIGHTS
FIRST POUR - 1,402 LBS
SECOND POUR - 3,498 LBS
TOTAL - 4,900 LBS

INSIDE WALL DIMENSIONS

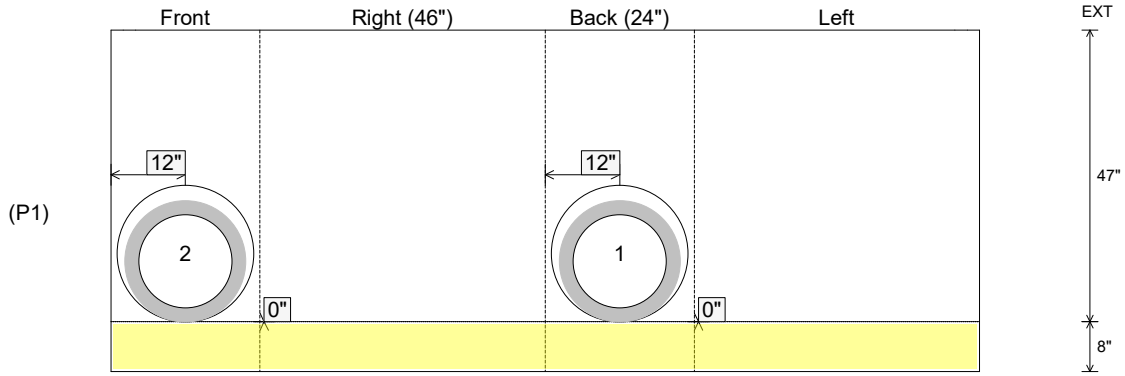

Coating (Int): Coating (Ext):	Seam Up: Flat Seam Dn: n/a	Wall Thickness: 6" Floor Height: 8"	Height (Int): 47" Height (Ext): 55"	Weight (Net): 4900 lb Volume (Net): 1.25cu.yd

Job Name: 25-4457B - INDOT Floyd Co R-42570-A Job Location: New Albany, IN Contractor: William & Charles Construction, LLC	Plant: 100 9/23/2026 11:22:21 AM	Tech: Jared - F PC: E. Bradley	

Structure ID: INLT-M109

P1 BX2446-06W08F-BAVF **BOX BASE 6inW, 8inF, Variable Ht F/n**

P2) 24" x 46" - CASTING HEIGHT - 8"	0 lb
P1) 24" x 46" - BOX BASE 6inW, 8inF, Variable Ht F/n - 47"	4900 lb
1) HOE R-3287-5 INDOT Type 5 FRAME & GRATE	250 lb
1) 24" x 46" - Conseal CS-102 1.00"	0 lb
2) Hole - 22	0 lb
Structure Total:	5150 lb

NOTE:
Walls: 6"
Floor: 8"

Structure Notes: .
INDOT STATE PROJECT
1. INDOT INLET TYPE HA5 / ASTM C913 SPEC'S.
2. CONCRETE = 4,000 PSI AT 28 DAYS.
3. NO STEPS AND NO INVERT CHANNEL.
4. CASTING BY ICAST (HOE R-3287-5 INDOT Type 5 FRAME & GRATE)
.
REINFORCING PER ASTM A615 (GRADE 60).
- WALLS (As .31) #5 BARS AT 12" C.C.E.W.
- FLOOR (As .31) #5 BARS AT 12" C.C.E.W.

Rim: 848.82' Rim to Invert: 4.49' Slack: 1.13" Sump: 2.25" Step Position:

Position	Elev	Angle	Ext. (cw)	Pipe	Pipe OD	Connector	Hole	Horz Size	Up (_)	Offset
Invert 1	844.33'	180°	18"	15" RCP B WALL	19.5"	Hole 22	22"	22"	0"	0"
Invert 2	844.33'	0°	18"	15" RCP B WALL	19.5"	Hole 22	22"	22"	0"	0"
Invert 3										
Invert 4										
Invert 5										
Invert 6										
Invert 7										
Invert 8										

SECOND POUR DRAWING

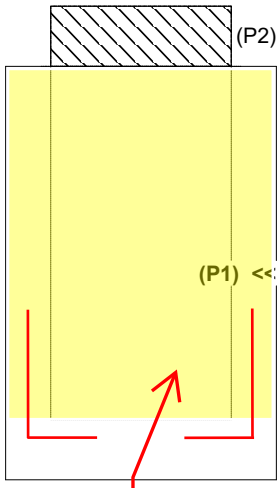

2ND POUR (WALLS)

RIGHT-SIDE UP VIEW (int. dimensions)

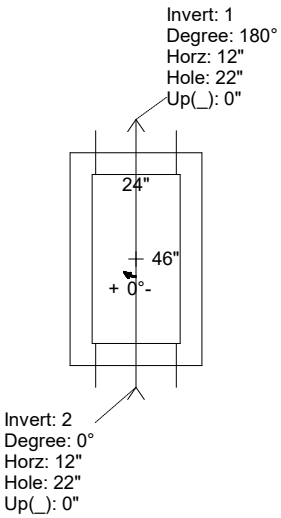

UPSIDE-DOWN VIEW (int. dimenions)

WEIGHTS
FIRST POUR - 1,402 LBS
SECOND POUR - 3,498 LBS
TOTAL - 4,900 LBS

NOTE:
Lifters: 4 ea. 5CA14 CONAC
A-anchors for plant & field handling - installed in 90 & 270 walls

INSIDE WALL DIMENSIONS

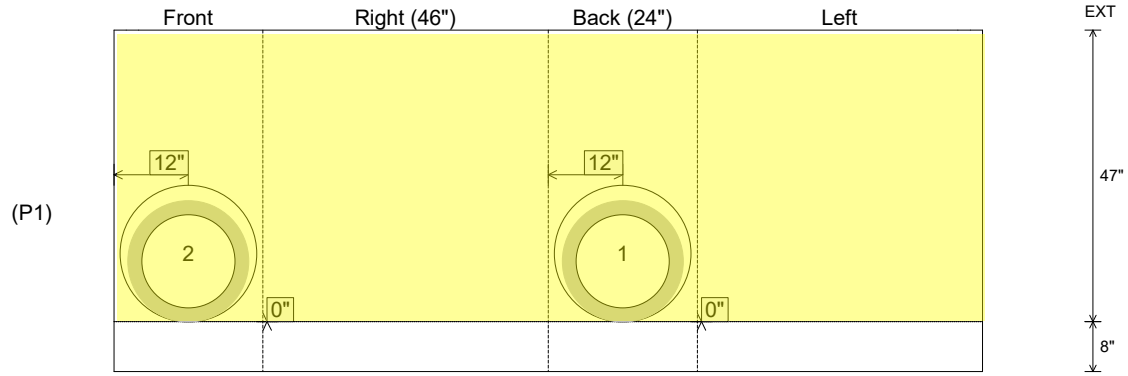

Coating (Int): Coating (Ext):	Seam Up: Flat Seam Dn: n/a	Wall Thickness: 6" Floor Height: 8"	Height (Int): 47" Height (Ext): 55"	Weight (Net): 4900 lb Volume (Net): 1.25cu.yd