Job Name: 25-4445 Montgomery LS/FM Improvements Job Location: Montgomery, IN Contractor: Koberstein Contracting, Inc.	Plant: Beaver Dam 6/18/2026 11:02:47 AM	Tech: S. Felletter PC: A. Chambers	

Structure ID: MAG (2)

P2 MH060LD13CC **MH FLAT TOP w/24" Ctr. Hole F/G**

P3) 24" - CASTING HEIGHT - 7"	0 lb
P2) 60" - MH FLAT TOP w/24" Ctr. Hole F/G - 13"	2674 lb
P1) 60" - MH BASE w/FLANGE (12F/07EF) T/n - 52"	11198 lb
1) CASTING - HOE MC-315 F/C Sanitary	258 lb
1) 60" - Conseal CS-102 1.00" (Double)	0 lb
1) 24" - Conseal CS-102 1.00" (Double)	0 lb
2) Hole - 10	0 lb
3) MH Step ML-10-TDS-NCR - 10"	0 lb
Structure Total:	14130 lb

Structure Notes: .
1. PER ASTM C478 SPECIFICATIONS.
2. CONCRETE = 4,000 PSI AT 28 DAYS.
3. CASTING BY ICAST (HOE 315 F/C "SANITARY").
4. 12" SUMP HOLE CENTERED IN BASE.

.
REINFORCING PER ASTM A615 (GRADE 60).
- TOP SLAB (As .62) #5 BARS AT 6" C.C.E.W.
- RISER/WALLS (As .18)
- FLOOR (As .31) #5 BARS AT 12" C.C.E.W.

GENERAL NOTES:
1. MANUFACTURED TO ASTM C-478 (LATEST REVISION).
2. CONCRETE 4,000 PSI AT 28 DAYS.
3. REINFORCING: #5 @ 6" C.C. E.W. PER ASTM A615 (GRADE 60)

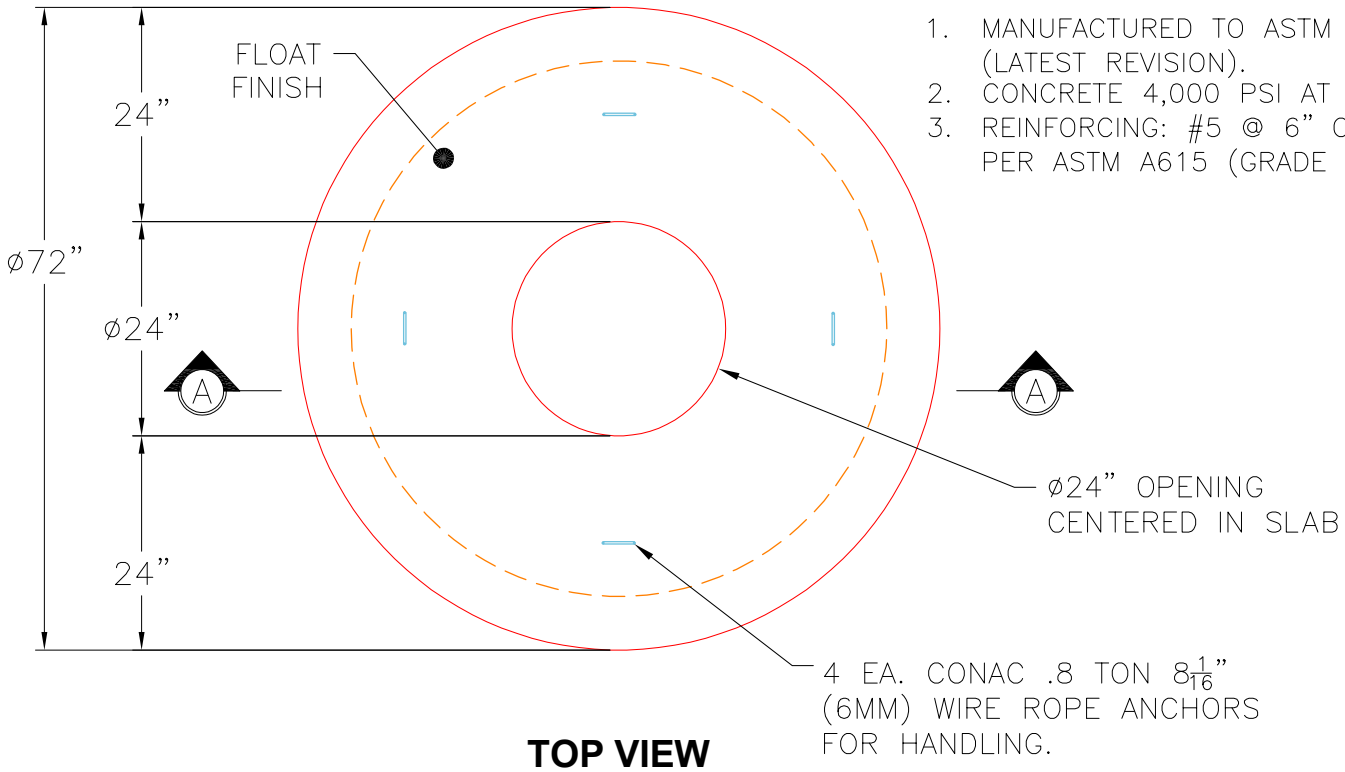

TOP VIEW

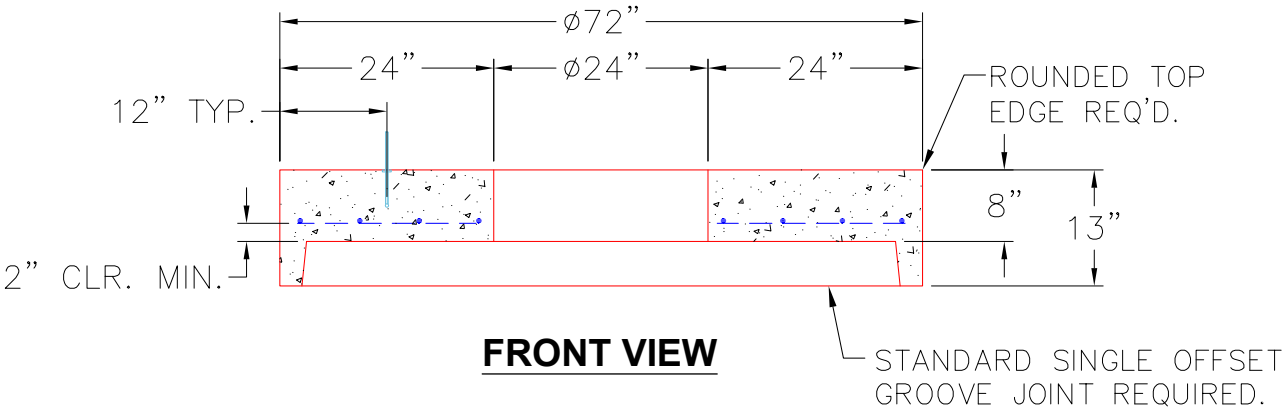

FRONT VIEW

Coating (Int): Coating (Ext):	Seam Up: Flat Seam Dn: Groove	Wall Thickness: 6"	Height (Ext): 13"	Weight (Net): 2674 lb Volume (Net): 0.68cu.yd