Job Name: 25-4288 - Project Wave Job Location: Franklin, KY 42134 Contractor: Cumberland Pipeline LLC	Plant: 100 8/28/2026 10:25:50 AM	Tech: PC: Erica Bradley	

Structure ID: A15

P1 MH048BA30X MH BASE w/XYPEX T/n

P5) 24" - CASTING HEIGHT - 7"	0 lb
P4) 48" - ECC XYPEX CONE w/ 24" HOLE F/G - 42"	3116 lb
P3) 48" - MH RISER w/XYPEX T/G - 60"	4192 lb
P2) 48" - MH RISER w/XYPEX T/G - 60"	4192 lb
P1) 48" - MH BASE w/XYPEX T/n - 30"	3330 lb
1) JOINT WRAP - 0.065"x6"x50' CONSEAL CS212	0 lb
1) JOINT WRAP PRIMER - CONSEAL CS-75 (1 gal.)	0 lb
1) 48" - MH INVERT CHANNEL w/XYPEX - FULL HEIGHT	1440 lb
1) CASTING - JBS 1150 F/C SANITARY	250 lb
3) 48" - Conseal CS-102 1.00" (Double)	0 lb
1) 24" - Conseal CS-102 1.00" (Double)	0 lb
2) PSX - 12-08 NYLO	16 lb
16) MH Step ML-10-TDS-NCR - 10"	0 lb
Structure Total:	16536 lb

Rim: 734.46' Rim to Invert: 16.63' Slack: 2.56" Sump: 2" Step Position: 0°

Structure Notes: 1. PER ASTM C-478 SPECIFICATIONS
2. CONCRETE: 4,000 PSI AT 28 DAYS
3. REINFORCEMENT: PER ASTM A615
4. INVERT CHANNEL REQUIRED
5. STEPS AT 0 DEGREES
6. JBS 1150 FRAME & COVER "SANITARY" SUPPLIED BY ICAST

Position	Elev	Angle	Ext. (cw)	Pipe	Pipe OD	Connector	Hole	Horz Size	Up (_)	Offset
Invert 1	717.83'	0°	0"	8" PVC SDR35	8.5"	PSX 12-08 NYLO	12"	12.129"	0"	0"
Invert 2	718.03'	90°	45.553"	8" PVC SDR35	8.5"	PSX 12-08 NYLO	12"	12.129"	2.4"	0"
Invert 3										
Invert 4										
Invert 5										
Invert 6										
Invert 7										
Invert 8										

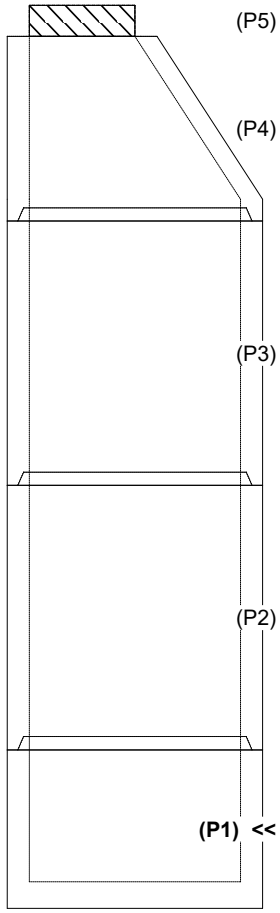

RIGHT-SIDE UP VIEW (int. dimensions)

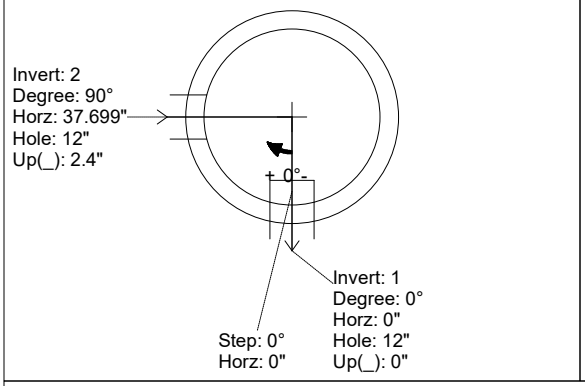

UPSIDE-DOWN VIEW (int. dimenions)

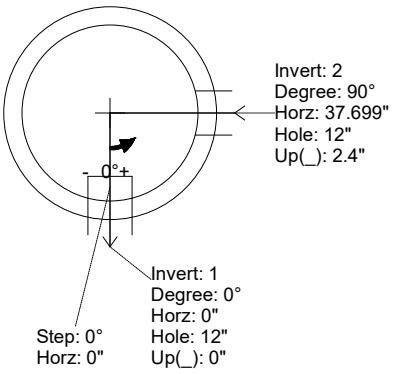

INSIDE WALL DIMENSIONS

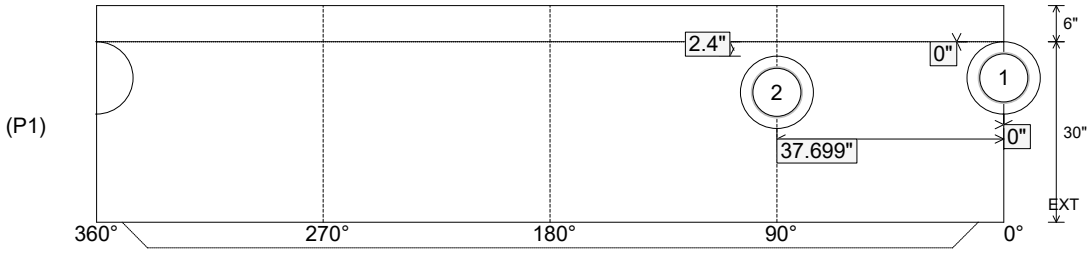

Coating (Int): Coating (Ext):	Seam Up: Tongue Seam Dn: n/a	Wall Thickness: 5" Floor Height: 6"	Height (Int): 30" Height (Ext): 36"	Weight (Net): 3330 lb Volume (Net): 0.85cu.yd

Job Name: 25-4288 - Project Wave Job Location: Franklin, KY 42134 Contractor: Cumberland Pipeline LLC	Plant: 100 8/28/2026 10:25:50 AM	Tech: PC: Erica Bradley	

Structure ID: A15

P1 MH048BA30X **MH BASE w/XYPEX T/n**

P5) 24" - CASTING HEIGHT - 7"	0 lb
P4) 48" - ECC XYPEX CONE w/ 24" HOLE F/G - 42"	3116 lb
P3) 48" - MH RISER w/XYPEX T/G - 60"	4192 lb
P2) 48" - MH RISER w/XYPEX T/G - 60"	4192 lb
P1) 48" - MH BASE w/XYPEX T/n - 30"	3330 lb
1) JOINT WRAP - 0.065"x6"x50' CONSEAL CS212	0 lb
1) JOINT WRAP PRIMER - CONSEAL CS-75 (1 gal.)	0 lb
1) 48" - MH INVERT CHANNEL w/XYPEX - FULL HEIGHT	1440 lb
1) CASTING - JBS 1150 F/C SANITARY	250 lb
3) 48" - Conseal CS-102 1.00" (Double)	0 lb
1) 24" - Conseal CS-102 1.00" (Double)	0 lb
2) PSX - 12-08 NYLO	16 lb
16) MH Step ML-10-TDS-NCR - 10"	0 lb
Structure Total:	16536 lb

Rim: 734.46' Rim to Invert: 16.63' Slack: 2.56" Sump: 2" Step Position: 0°

Structure Notes: 1. PER ASTM C-478 SPECIFICATIONS
2. CONCRETE: 4,000 PSI AT 28 DAYS
3. REINFORCEMENT: PER ASTM A615
4. INVERT CHANNEL REQUIRED
5. STEPS AT 0 DEGREES
6. JBS 1150 FRAME & COVER "SANITARY" SUPPLIED BY ICAST

Invert channel drawing
Full height invert - Xypex

Position	Elev	Angle	Ext. (cw)	Pipe	Pipe OD	Connector	Hole	Horz Size	Up (_)	Offset
Invert 1	717.83'	0°	0"	8" PVC SDR35	8.5"	PSX 12-08 NYLO	12"	12.129"	0"	0"
Invert 2	718.03'	90°	45.553"	8" PVC SDR35	8.5"	PSX 12-08 NYLO	12"	12.129"	2.4"	0"
Invert 3										
Invert 4										
Invert 5										
Invert 6										
Invert 7										
Invert 8										

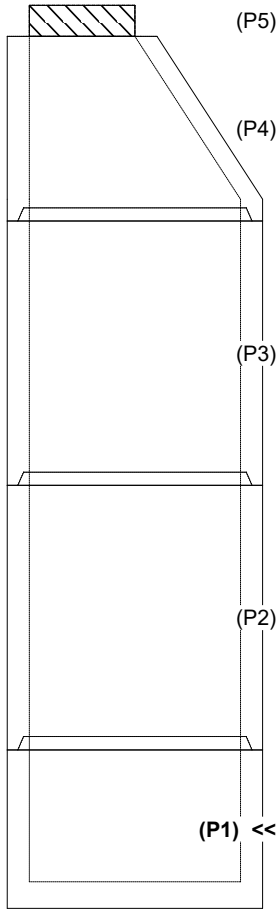

RIGHT-SIDE UP VIEW (int. dimensions)

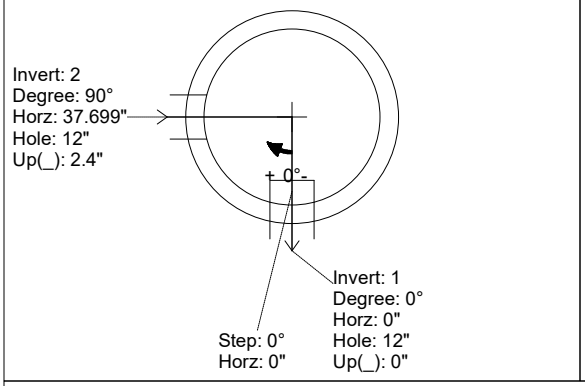

UPSIDE-DOWN VIEW (int. dimenions)

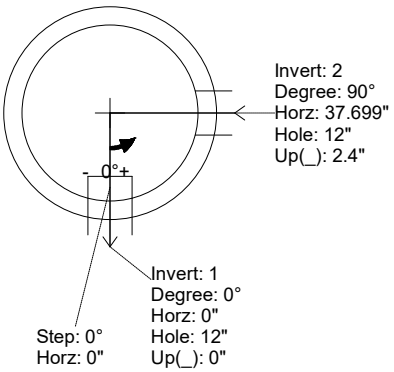

INSIDE WALL DIMENSIONS

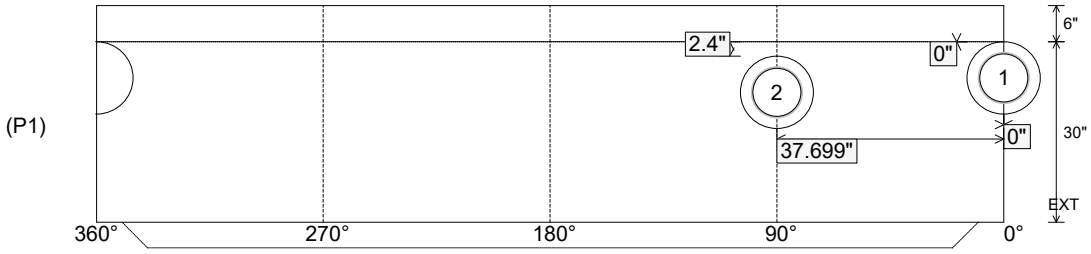

Coating (Int): Coating (Ext):	Seam Up: Tongue Seam Dn: n/a	Wall Thickness: 5" Floor Height: 6"	Height (Int): 30" Height (Ext): 36"	Weight (Net): 3330 lb Volume (Net): 0.85cu.yd